Eco Mixed Flow (eMF) In-Line fan range

Installation and Wiring Instructions

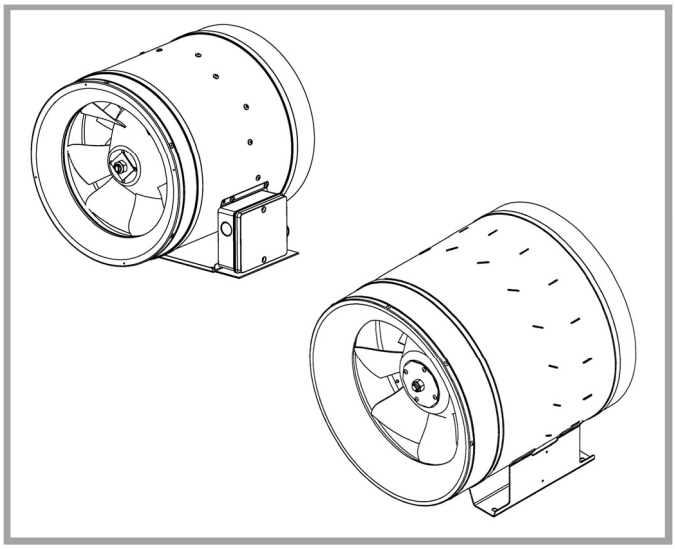

Stock Ref. N°

1 PHASE	3 PHASE
EMF35514	EMF35532
EMF35512	EMF40034
EMF40014	EMF40032
EMF45014	EMF45034
EMF50014	EMF50034
EMF56014	EMF56034
EMF63014	EMF63034
	EMF71034

Vent-Axia®

PLEASE READ INSTRUCTIONS IN CONJUNCTION WITH THE ILLUSTRATIONS.
PLEASE SAVE THESE INSTRUCTIONS

IPX4

CE

Vent-Axia

Installation and Wiring Instructions for the ECO MIXED FLOW FAN range.

IMPORTANT: READ THESE INSTRUCTIONS BEFORE COMMENCING THE INSTALLATION

DO NOT install this product in areas where the following may be present or occur:

- Excessive oil or a grease laden atmosphere.
- Corrosive or flammable gases, liquids or vapours.
- Ambient temperatures higher than 40°C or less than –5°C.
- Possible obstructions which would hinder the access or removal of the Fan.
- Sudden ductwork bends or transformations close to the Fan.

SAFETY AND GUIDANCE NOTES

A. All wiring to be in accordance with the current I.E.E. Regulations, or the appropriate standards of your country and **MUST** be installed by a suitably qualified person.
B. The Fan should be provided with a local double pole isolator switch having a contact separation of at least 3mm.
C. Ensure that the mains supply (Voltage, Frequency, and Phase) complies with the rating label.
D. The Fan should only be used in conjunction with the appropriate Vent-Axia products.
E. It is recommended that the connection to the fan connecter terminals is made with flexible cable.
F. When the Fan is used to remove air from a room containing a fuel-burning appliance, precautions must be taken to avoid back-flow of gases into the room from the open flue of gas or other appliance. Ensure that the air replacement is adequate for both the fan and the fuel-burning appliance.
G. The Fan should not be used where it is liable to be subject to direct water spray for prolonged periods of time.
H. Where ducted Fans are used to handle moisture-laden air, a condensation trap should be fitted. Horizontal ducts should be arranged to slope slightly downwards away from the Fan.
I. This appliance is not intended for use by persons (including children) with reduced physical, sensory or mental capabilities, or lack of experience and knowledge, unless they have been given supervision or instruction concerning use of the appliance by a person responsible for their safety.
J. Young children should be supervised to ensure that they do not play with the appliance.
K. Always operate the fan with the flow of air in the correct direction, see the marking on the fan rating label.

A. INSTALLATION.

The unit is designed as an in-line duct fan to be positioned between lengths of ducting. Short duct runs terminating close to the fan (i.e. within 1.5m) must incorporate suitable guards unless the fan is mounted higher than 2.1m above the floor. If flexible ducting is used it should be fully extended to obtain the best results. Position the fan at the highest point on the system with both ducting runs sloping downwards from this point. In circumstances where an excessive amount of moisture is present in the air then a condensation trap should be installed. When siting the appliance ensure that there is sufficient space to allow access for any servicing and maintenance.

The eco mixed flow in-line fans can be mounted in any position, For mounting the units we recommend using anti-vibration mounts and a flexible connector kit to reduce noise transmission into the ducting system. (Available from Vent-Axia)

B. WIRING.

WARNING: THE FAN AND ANCILLARY CONTROL EQUIPMENT MUST BE ISOLATED FROM THE POWER SUPPLY DURING THE INSTALLATION / OR MAINTENANCE.

THESE ECO MIXED FLOW FANS MUST BE EARTHED.

1. Remove terminal box cover & screws and put to one side.(Single phase fans only, 3 phase fans are factory fitted with a lead).
2. Select and follow the wiring diagram that relates to your fan.
3. Check all connections have been made correctly and ensure all terminal connections and cable glands/clamps are securely fastened.
4. The cable entry must be made using the cable grommet provided
5. Replace terminal box cover & screws. (Single phase fans only)
6. Ensure the impeller rotates and is free from obstructions.

Select the wiring diagram that relates to your fan

(Note:- *//*** relates to fan control & protection, see back page for details.**

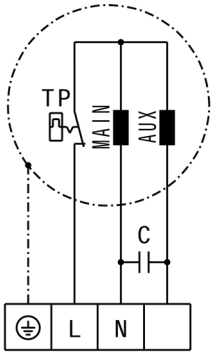

Wiring diagram
EMF35512**
EMF35514**

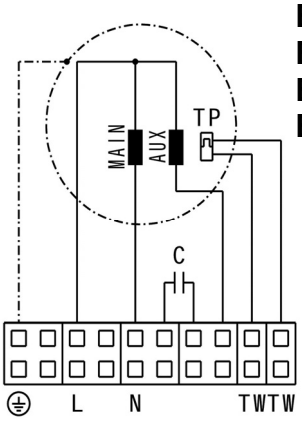

Wiring diagram
EMF45014**
EMF50014**
EMF56014**
EMF63014**

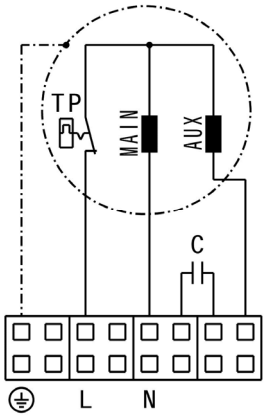

Wiring diagram
EMF40014

C. MOTOR PROTECTION & CONTROL

*May only be operated with frequency converter (max.230V)

**Thermo contact must be connected to external tripping unit. The internal thermal is not suitable to protect the motor during a blockage. I.e. in cases where a motor blockage can occur, a motor protection switch with corresponding rated current should be prefixed. Ideally, we recommend to use a protection switch with thermal and magnetic release.

***For cost reasons, common frequency converters have no sinusoidal but a pulse width signal at the outlet. This causes motor noise, which increases with motor size. Depending on the ventilation design and the radiating surface the noise is noticeable. At very low noise requirements this can be disturbing.
Under normal industrial applications, the noise is usually acceptable.
There are also frequency converters with sinusoidal output, but they are significantly more expensive (coefficient 2..4). With these there is no additional motor noise.

Wiring diagram
Note:- 3 Phase fans are fitted with a flying lead.
EMF35532*/**
EMF40034*/**
EMF40032/*****
EMF45034*/**
EMF50034*/**
EMF56034/*****
EMF63034/*****
EMF71034/*****

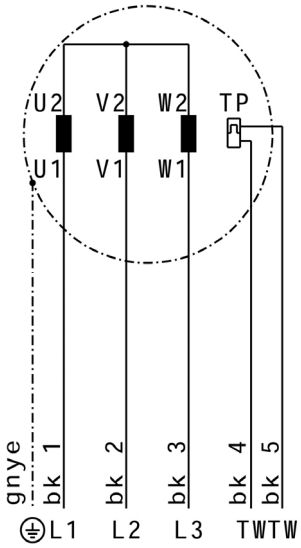

D. SERVICING AND MAINTENANCE.

WARNING: THE FAN AND ANCILLARY CONTROL EQUIPMENT MUST BE ISOLATED FROM THE POWER SUPPLY DURING MAINTENANCE.

1. At intervals appropriate to the installation, the fan should be inspected and cleaned to ensure there is no build up of dirt or other deposits.
2. When cleaning the fan impeller take care not to move or remove the balance weights.
3. Under no circumstances should the interior be cleaned with water.
4. By installing an air filter in the system, the cleaning interval can be considerably extended.

The Eco Mixed Flow (eMF) fan has sealed for life bearings, which do not require lubrication.

The Vent-Axia Guarantee

Applicable only to products installed and used in the United Kingdom. For details of guarantee outside the United Kingdom contact your local supplier.

Vent-Axia guarantees its products for two years from date of purchase against faulty material or workmanship. In the event of any part being found to be defective, the product will be repaired, or at the Company's option replaced, without charge, provided that the product:-

- Has been installed and used in accordance with the instructions given with each unit.
- Has not been connected to an unsuitable electricity supply. (The correct electricity supply voltage is shown on the product rating label attached to the unit).
- Has not been subjected to misuse, neglect or damage.
- Has not been modified or repaired by any person not authorised by the company.

IF CLAIMING UNDER TERMS OF GUARANTEE

Please return the complete product, carriage paid to your original supplier or nearest Vent-Axia Centre, by post or personal visit. Please ensure that it is adequately packed and accompanied by a letter clearly marked "Guarantee Claim" stating the nature of the fault and providing evidence of date and source of purchase.

The guarantee is offered to you as an extra benefit, and does not effect your legal rights

Vent-Axia®

Head Office: Fleming Way, Crawley, West Sussex, RH10 9YX. Tel: 01293 526062 Fax: 01293 551188

UK NATIONAL CALL CENTRE, Newton Road, Crawley, West Sussex, RH10 9JA
SALES ENQUIRIES: Tel: 0344 8560591 Fax: 01293 534898
TECHNICAL SUPPORT: Tel: 0344 8560595 Fax: 01293 532814
For details of the warranty and returns procedure please refer to www.vent-axia.com or write to Vent-Axia Ltd, Fleming Way, Crawley, RH10 9YX

446996 D 0316