Vent-Axia®

The UK's Leading Ventilation Company

Ventilation for New Build Residential

Edition 5.9

www.vent-axia.com/new-build

Why choose Vent-Axia

Vent-Axia has been the UK market leader for over 80 years and has vast experience in supplying heat recovery solutions to the UK and countries around the world, whose building regulations demand the most effective, sustainable and energy efficient ventilation solutions.

We are with you all the way

- Unparalleled customer service
- Industry leading design support
- Providing support and solutions on-site

Availability

- With the widest distribution network of any manufacturer in the UK we pride ourselves on having products available when and where you need them

Product solutions

- Whatever the product application, we have the most energy efficient solutions available
- Unique solutions designed to fit into all your buildings
- With absolute focus on the end user we work hard to produce the quietest, most comfortable products for occupiers to live with

Vent-Axia®

Contents

Case Studies 4 - 5

ADF & ADL of the Buildings Regulations 6 - 7

System 1 and 2 - Intermittent Fans & Passive Stack 8

System 3 – Continuous Mechanical Extract (MEV) 9

System 4 - Mechanical Ventilation with Heat Recovery (MVHR) 10 - 11

Energy Related Products Directive (ErP) 12

Complete Solutions - Residential Ventilation 13

System 1 Intermittent Extract Fans

NEW NBR High Pressure Axial Fan Range 16 -17

Lo-Carbon Silhouette® 100/SELV Bathroom/Toilet Fan 18 - 19

Lo-Carbon Silhouette® 125 Bathroom/Toilet Fanv 20

Lo-Carbon Silhouette® 150 Kitchen Fan 21

Lo-Carbon Solo Plus/SELV Centrifugal Bathroom/Toilet Fan 22 - 23

Lo-Carbon Minivent Ducted Bath/Shower Fan Kit 24

Slimline 100 & 150 Bathroom/Kitchen Fan 25

Eclipse 100 & 150 Bathroom/Kitchen Fan 26 - 27

Solo Plus® Bathroom Fan 28 - 29

Centrif® Duo Plus Kitchen/Utility Fan 30 - 31

ACM 100-200 Inline Fan 32 - 33

ACM 250-315 Inline Fan 34 - 35

System 3 Lo-Carbon dMEV, MEV

NEW Lo-Carbon NBR dMEV/dMEVe 38 - 39

Lo-Carbon Centra®/SELV dMEV 40 - 41

Lo-Carbon Quadra 42 - 43

NEW Lo-Carbon Sentinel Multivent/Plus/CO_2 MEV 44 - 47

NEW Lo-Carbon Multivent MVDC-MS/MSH MEV 48 - 49

System 4 MVHR Units for Residential & Commercial

Lo-Carbon Sentinel Kinetic® Range Overview 52 - 55

Lo-Carbon Sentinel Kinetic B/BH MVHR Unit 56 - 59

Lo-Carbon Sentinel Kinetic® FH MVHR Unit 60 - 63

Lo-Carbon Sentinel Kinetic® Advance MVHR Unit 64 - 67

Lo-Carbon Sentinel Kinetic® Plus MVHR Unit 68 - 71

Lo-Carbon Sentinel Kinetic® High Flow MVHR Unit 72 - 73

Lo-Carbon Sentinel Kinetic® Cooker Hood MVHR Unit 74 - 77

Lo-Carbon Sentinel Kinetic® Horizontal MVHR 78 - 83

Lo-Carbon Kinetic® Plus E MVHR 84 - 87

HR100R/RS Ducted MVHR 88 – 89

Integra Ducted MVHR 90 - 91

Integra Plus EC Ducted MVHR 92 - 93

Sentinel Apex 94 - 109

Remote System Hood 110

PIV Systems

Lo-Carbon PoziDry Pro Loft PIV 114 - 115

Lo-Carbon PoziDry Compact PIV 116 - 117

Overheating Solutions

Lo-Carbon NBR Cool Unitary Fan 120 - 121

NBR CoolBox Kits 122 - 125

Ducting, Attenuators, Fittings and Accessories

A1 Fire-Rated Ducting Kit 128 - 129

Uniflexplus+ RV Adjustable Valve 130 - 131

Vent-Axia Pure Air 132 - 133

Whole House Attenuators 134 - 135

Universal Roof Vents 136

Pull-out System Hood 137

Arterial Duct System 138 - 139

Uniflexplus+ Semi-Rigid Duct System 140 - 141

Internal Fit Wall Kit 142

Low Resistance Inlet/Outlet Air Brick 143

Ducting & Accessories 144 - 151

Fire Stopping - Round and Flat Ductting 152

Lo-Carbon Sentinel Kinetic BH

Floating Homes

Vent-Axia provides MVHR system for an innovative Floating Home prototype

With a housing shortage in the UK and an increase in building on flood plains, or land at risk of flooding, the Floating Home offers an exciting house building solution. Inspired by canal living and designed by Baca Architects, the 'Chichester' prototype model was built by Floating Homes Limited and is not a houseboat but a house that floats. Situated on a residential mooring on a disused canal which runs alongside Chichester Marina in West Sussex, the Floating Home was built in two separate parts, the floating foundations and the modular superstructure and then assembled on the canal. The whole build took four months to complete and fit out, including installation of Vent-Axia's Sentinel Kinetic BH MVHR Unit.

Essentially the home was built in the same way as one on land but the foundations float. However, given the close proximity to water there was potential for more humidity than a land-based home, as well as the potential for reflections of the sun to enhance solar gain. Both these factors were considerations when specifying the Sentinel Kinetic BH MHVR unit.

Built Environment Technology Ltd designed and commissioned the ventilation system for the project. Richard Porteous, Senior Projects Manager at Built Environment Technology Ltd explains: "Due to the very low permeability of the home's envelope mechanical ventilation was essential. The Sentinel Kinetic BH MVHR Unit had the right eco-credentials for the project, plus it is very compact and features an integral humidity sensor and summer bypass, which were important for the Floating Home."

"Having lived in and visited houseboats that did not have MVHR it was clear that this technology was essential for the air quality and sustainability of our floating homes. We also specified Vent-Axia for its reputation, Vent-Axia has been at the forefront of ventilation for over 80 years, and is a British manufacturer of high repute. Of course they fit the Floating Homes ethos!,"

Ideal for low-permeability properties

Recovering up to 90% heat energy

"Due to the very low permeability of the home's envelope mechanical ventilation was essential. The Sentinel Kinetic BH MVHR Unit had the right eco-credentials for the project, plus it is very compact and features an integral humidity sensor and summer bypass, which were important for the Floating Home."

Mark Junak from Floating Homes.

Sentinel Kinetic Plus

Virido Development

Vent-Axia provides sustainable development with energy efficient ventilation

The Virido development offers future living with a collection of 208 unique apartments, duplex apartments and townhouses that offer a more sustainable lifestyle arranged around an open green space. Brimming with eco-design, the homes are architecturally pleasing, triple-glazed and clad in brick and dark timber. The Ventilation system was designed, installed and commissioned by DR Ventilation using Vent-Axia's Lo-Carbon Sentinel Kinetic BH and Lo-Carbon Sentinel Kinetic Plus Mechanical Ventilation with Heat Recovery (MVHR) units, providing energy efficient and effective ventilation to these sustainable homes.

To meet Code for Sustainable Homes Level 5, the homes in the sustainable development in Cambridge have been designed and constructed to be highly energy efficient and to reduce carbon emissions by 100%. To achieve this the homes at Virido have been designed to use as little energy and water as possible. Virido's homes provide exceptional standards of insulation. Using Structurally Insulated Panels (SIP), approximately 4 times more insulation than an average new build home is achieved. The walls provide approximately 20% less heat loss than a typical building without compromising on room sizes. With such high levels of insulation and air tightness MVHR was vital to provide good air ventilation to the homes.

The pioneering Sentinel Kinetic BH MVHR Unit is designed specifically for new build and low-permeability properties. A whole-house, multi-room ducted solution, this MVHR system combines supply and extract ventilation in one unit. Warm, moist air is extracted from `wet' rooms through ducting and passed through the heat exchanger before being exhausted to the outside. Fresh incoming air is filtered and then preheated via the integral heat exchanger which recovers an average of 90% of the heat energy that would otherwise be wasted. With comfort key for occupants the system also features a `summer bypass', for passive cooling when conditions allow and an integral humidity sensor for intelligent air quality control, which are vital in thermally efficient air tight homes.

"The homes in the Virido development feature very high levels of insulation, air tightness and thermal efficiency which meant it was essential to specify MVHR in order to provide good levels of ventilation within the properties. We specified Vent-Axia's MVHR because of their eco-credentials offering both energy efficient ventilation and good comfort for households. Having worked on many developments we have great confidence in Vent-Axia's products and a professionally installed system with an efficient MVHR unit provides a winning combination."

Helen Roberts, Director, DR Ventilation

Code for Sustainable Homes Level 5

208 unique apartments, duplex apartments and townhouses

The Sentinel Kinetic BH and Sentinel Kinetic Plus MVHR units both fit with the Virido's project objective which is to provide homes that effortlessly facilitate a lifestyle which is both environmentally responsible and sustainable without compromising on comfort.

Approved Documents F (ADF) and L (ADL) of the Building Regulations

Approved Documents F (ADF) and L (ADL) of the Building Regulations were issued in October 2010. ADL was further revised in 2013. They place much greater emphasis on effective design, installation and operation of ventilation systems. The objective is to maximise carbon reduction through correctly specified and designed systems, competent installation minimising losses of the systems, verified performance once installed and correct operation by the home owner.

ADF Overview

This section explains how to achieve compliance, looking at the three key areas in detail: Specification and Design, Installation and Commissioning, Operation and Maintenance.

ADF, Means of Ventilation, is the document which addresses the performance requirements of different ventilation systems. Factors such as airflow rates, noise and occupiers operation are all covered here.

The latest edition has a few top level changes which may mean something to you (we will cover them in more detail in each section later on) but as an overview they are as follows:

Ventilation Rates

The ventilation rate of a given property is calculated dependant on the designed infiltration rate. Basically, how much air leaks in or out of the dwelling (anyone who has lived in a drafty house will understand the importance that this has!). The airtightness of a building is defined as its air permeability; this is the volume of air that escapes through the envelope of the building per hour ($m^3/h.m^2$).

Installation and Commissioning

There is guidance on good installation practice and a commissioning guide set out in a supporting document to ADF known as the Domestic Ventilation Compliance Guide. This has been designed to ensure that ventilation not only delivers the required airflow, but also does it efficiently and quietly. The document also links in with the competent persons schemes and training programmes run by the industry.

ADL Overview

ADL, the document concerning fuel and power, covers the efficiency and energy consumption of ventilation products, among others. Putting it simply ADL has improved the energy efficiency targets for buildings by 30%, with further improvements through target emission rate. There is also an opportunity to save energy through ventilation by using SAP Performance Characteristics Database (PCDB), formerly known as Appendix Q. This is a method by which energy efficient ventilation systems can be selected and the energy benefit be added back into the SAP calculation.

What does this mean for ventilation?

Ventilation uses energy in two ways. Firstly, mechanical systems use electricity to power the motors and secondly heat is lost as heated air is extracted from a building. This is now dealt with by a minimum energy efficiency level for all ventilation systems being set in a supporting document called The Domestic Building Services Compliance Guide. There are now for the first time new build and refurbishment minimums in both the amount of electricity a motor can use minimum specific fan power (SFP) and a minimum energy efficiency of heat exchangers in systems that can recover heat.

We recommend that best practice is followed when designing and installing a system, as the product performance is affected by both areas.

Ventilation

There are four systems covered in the building regulations and these are as follows:

System 1
Intermittent fans and background ventilation

System 2
Passive stack

System 3
Continuous Mechanical Extract Ventilation (MEV and dMEV).

System 4
Continuous mechanical supply and extract ventilation with heat recovery (MVHR). We will be looking at these in more detail under separate sections later in this brochure.

Summary

There are four areas for consideration when selecting ventilation:

- Airflow performance
- Minimum energy efficiency limits
- Good installation
- Use by occupiers

Leaky House
For properties leakier than $5m^3h/m^2$ infiltration.

Non Leaky House
For properties tighter than $5m^3h/m^2$ infiltration. Basically, tighter buildings now have an increased ventilation rate.

Things to Remember:

Airflow performance ▶ Minimum energy efficiency limits ▶ Good installation ▶ Use by occupiers

ADF Airflows, Background Ventilators and Noise

There are some considerations dependant on which ventilation system is being used. These are outlined here but are shown in more detail in the separate sections for each system.

Intermittent Fans and Passive Stack (System 1 and 2)

These have different levels of background vents dependant on the infiltration rate of the building.

MEV (System 3)

Window vents are not needed in leakier buildings.

MVHR (System 4)

The rate of ventilation can be reduced dependant on the leakage of the building. If the building is leakier than $5m^3h/m^2$ then the mechanical ventilation rate is reduced.

Noise

Noise is now covered by the building regulations. As our buildings become more energy efficient and more air tight, the amount of noise entering them from outside is reduced. This has the effect of making them much quieter inside. That means that any noise made inside the house will be more noticeable so ADF now recommends a maximum noise level for any continuous system of 35dB(A).

The table below shows the airflow rates as described in ADF.

Table 5.1a Extract ventilation rates

	Intermittent extract	Continuous extract	
Room	Minimum rate	Minimum high rate	Minimum low rate
Kitchen	30 l/s adjacent to hob or 60 l/s elsewhere	13 l/s	
Utility room	30 l/s	8 l/s	Total extract rate should be at least the whole dwelling ventilation rate given in Table 5.1b
Bathroom	15 l/s	8 l/s	
Sanitary accommodation	6 l/s	6 l/s	

Table 5.1b Extract ventilation rates

Number of bedrooms in dwelling	1	2	3	4	5
Whole dwelling ventilation rate[a,b] (l/s)	13	17	21	25	29

Notes:

a. In addition, the minimum ventilation rate should be not less than 0.3 l/s per m^2 of internal floor area. (This includes all floors, e.g. for a two-storey building add the ground and first floor areas).

b. This is based on two occupants in the main bedroom and a single occupant in all other bedrooms. This should be used as the default value. If a greater level of occupancy is expected add 4 l/s per occupant.

ADL - Minimum efficiencies of motors and heat exchangers

Energy Efficiency

As mentioned earlier, there are energy efficiency limits for all of the systems covered in the building regulations as well as some minimum heat exchanger efficiencies for heat recovery products. These are as follows:

Specific Fan Power (SFP)

- Intermittent extract fans - specify a maximum of 0.5 W/l/s
- Continuous extract fans - specify a maximum of 0.7 W/l/s
- Continuous supply and extract fans (MVHR) - specify a maximum of 1.5W/l/s

Heat Exchanger Efficiency

There is a requirement for any heat exchanger in a residential property to be a minimum of 70% efficient.

New Build

Building Regulations favour continuous ventilation as these products perform better in SAP, are easier to specify and easier to standardise (no need for trickle vents). This encourages new build designers to move new planning applications away from intermittent fans. Vent-Axia has the solution with Centra, Lo-Carbon dMEV and Quadra as some of the best performing products on SAP PCDB (Appendix Q).

Refurbishment

The Lo-Carbon intermittent range is essential to the refurbishment sector complying with the SFP of 0.5W/l/s. Giving benefits of 80% reduction in power consumption, 5 Year Motor Guarantee, the fans are suitable for wall, window, ceiling or ducted applications.

The whole Lo-Carbon residential range of fans meet the requirements of 0.5 W/l/s.

System 1 and 2 - Intermittent Fans & Passive Stack

System 1 - Intermittent Fans and Background Ventilators

Intermittent extract fan airflow rate based on table 5.1a from the previous page.

The design air permeability will determine the equivalent ventilator area as laid out in the tables.

System 2 - Passive Stack Ventilation (PSV)

This system relies on the natural stack effect by which warm air rises and is extracted from the wet rooms through 125mm rigid ducts running to ridge height. Trickle vents are required and can be humidity controlled. **Internal rooms require 'assisted' ventilation i.e. by mechanical ventilation.**

Background Ventilation

Much larger equivalent areas (up to 50% bigger) are now required for background ventilators when using system 1 and 2.

For example a three bed house with a floor area of 100m² a total equivalent area of 65000mm² is required. This may only have six windows to fit them in which would mean a free area of 10,833mm in each window. This not only takes up a lot of space in each window frame and looks unsightly, but the window fabricator will charge to fit each one and this example could require three vents on each window.

A - Total equivalent ventilator area [a] (mm^2) for a dwelling with any design air permeability.

Total floor area (m^2)	Number of bedrooms [b] 1	2	3	4	5
50	35000	40000	50000	60000	65000
51-60	35000	40000	50000	60000	65000
61-70	45000	45000	50000	60000	65000
71-80	50000	50000	50000	60000	65000
81-90	55000	60000	60000	60000	65000
91-100	65000	65000	65000	65000	65000
100	Add 7000 mm^2 for every additional 10m² floor area				

B -Alternative guidance on total equivalent ventilator area[3] (mm^2) for a dwelling with a designed air permeability leakier than (>) $5m^3/(h.m^2)$ at 50 Pa.

Total floor area (m^2)	Number of bedrooms [b] 1	2	3	4	5
50	25000	35000	45000	45000	55000
51-60	25000	30000	40000	45000	55000
61-70	30000	30000	30000	45000	55000
71-80	35000	35000	35000	45000	55000
81-90	40000	40000	40000	45000	55000
91-100	45000	45000	45000	45000	55000
100	Add 5000 mm^2 for every additional 10m² floor area				

	Key increase mm^2			
Increases from the requirements of ADF 2006	5000	10000	15000	20000

Notes:

a. The equivalent area of a background ventilator should be determined at 1 Pa pressure difference, using the appropriate test method given in Table 5.3

b. This is based on two occupants in the main bedroom and a single occupant in all other bedrooms. For a greater level of occupancy, assume a greater number of bedrooms (i.e. assume an extra bedroom per additional person). For more than five bedrooms, add an additional 10000 mm^2 per bedroom

ADF and ADL Compliant

The requirement for reduced specific fan powers means that no intermittent fan can use more than 0.5 W/l/s.

Vent-Axia offers a fully compliant Lo-Carbon intermittent range which meets both ADF and ADL.

Range Features

- Models: Basic/Timer/Humidity - Installation options
- Low power consumption - ADL Compliant
- Quiet running
- Back draught shutters included
- Modern aesthetics
- Ball bearing motors for vertical or horizontal application
- 5 year motor guarantee
- Wall, ceiling, panel and window mounting options available

Lo-Carbon Product - Intermittent	l/s	Watts	SFP (W/l/s)
VA100 (Bathrooms)	21	6.1	0.29
VA100 SELV (Bathroom)	21	6.1	0.29
Silhouette 100 (Bathroom)	29	8.7	0.30
Silhouette 100 SELV (Bathroom)	29	8.7	0.30
Minivent	31	6.5	0.21
Vent-A-Light	31	6.5	0.21
Solo Plus*	VAR	VAR	0.33
Solo Plus SELV *	VAR	VAR	0.33
VA150 (Kitchen)	64	11.5	0.18
Silhouette 150 (Kitchen)	67	8.2	0.12

* VAR = Variable speed settings and controls so lowest SFP quoted

System 3 – Continuous Mechanical Extract (MEV)

There are two ways to comply with system 3: Centralised (MEV) or Decentralised (dMEV).

MEV incorporates a single unit that extracts stale air to atmosphere from all the wet rooms via ducting.

Decentralised MEV requires continuous running extract fans mounted in all wet rooms in much the same way as a traditional fan is mounted.

As shown on page 7, rates as per table 5.1a for the continuous systems are much lower than intermittent ventilation, and in kitchens particularly the rate falls from 60l/s to 13l/s. This can remove the requirement for noisy fans or cooker hoods completely.

Reduced Background Ventilators

An additional benefit is through a reduction in the number of background vents needed. If the design air permeability is <5m^3/(h.m^2)@50Pa, background ventilators are required in habitable rooms at 2500mm^2 only. This is one small vent. If design air permeability is >5m^3/(h.m^2)@50Pa there is no requirement for background ventilators at all. This offers the benefit of not having to install several unsightly window vents, as required with intermittent systems.

Energy Efficiency

The Domestic Building Services Compliance Guide states a maximum specific fan power (SFP) of 0.7W/l/s for MEV systems. These can also be SAP PCDB eligible which enables selection during the SAP calculation (there is an eligible product list embedded within the SAP software programmes). This enables the difference between the specific product and the default settings within SAP.

Vent-Axia Lo-Carbon Multivent ranges incorporate energy efficient EC/DC motors providing SFPs down to 0.15W/l/s which is over 75% savings over the default 0.7W/l/s in SAP. This low SFP makes it one of the most efficient MEV products available.

In much the same way, dMEV can be applied and the Vent-Axia Lo-Carbon dMEV also provides SFPs down to 0.13W/l/s which is up to a 82% saving over the default 0.7W/l/s in SAP. This also makes it one of the most efficient dMEV products available.

Installation

The 2010 regulations also require that systems are installed and commissioned correctly. To help, we provide training courses. For more information, please see the training scheme section located on page 13.

Lo-Carbon NBR dMEV/dMEVe

Range Features

- Market leading efficiency
- Digital controls with display
- Fully adjustable normal & boost airflow settings
- 100mm & 125mm model
- Recognised in SAP PCDB
- Constant volume
- Display showing airflow and system pressure
- Switched live connection for external switches/sensors
- IPX5 rated
- Multi–orientation grille
- NHBC Approved
- STAS Approved (Scotland)
- Airflow sensor models UKAS calibrated

Lo-Carbon Quadra

Range Features

- Single fan for use in toilets, bathrooms, utility rooms and kitchens
- Meets Building Regulations for intermittent or continuous use
- Guaranteed installed performance
- ADF compliant - meets airflow rates in table 5.1a and 5.1b
- ADL compliant - SFP 0.38W/l/s
- Suitable for wall, ceiling and panel mounting
- Filterless technology and maintenance free
- Lo-Carbon motors offering 90% energy savings and long life

Lo-Carbon Multivent MVDC-MS/MS-H

Range Features

- Recognised in SAP PCDB with best in class Specific Fan Power
- Reduces your carbon footprint
- Fitted with three extract 125 diameter spigots allowing quick connection to ducts
- Complies with Building ADF (System 3)
- Option of wall, ceiling and loft mounting
- Improved controllability
- Two Switched Live connections
- Fully variable normal, purge and boost speeds
- Ultra quiet
- Integral humidistat (H version)

SAP PCDB Test Results

Exhaust Terminal Configuration	Total Flow Rate (l/s)	SFP (W/l/s)
K+1	21	0.17
K+2	29	0.16
K+3	37	0.17
K+4	45	0.18
K+5	53	0.21
K+6	61	0.24

System 4 - Mechanical Ventilation with Heat Recovery (MVHR)

MVHR is a whole dwelling ventilation system that supplies and extracts air continuously at a low rate (as per table 5.1b) with the facility to be boosted as required. The unit is normally installed in the loft space or cupboard and rigid ducting supplies fresh filtered air to the habitable rooms and extracts stale polluted air from the 'wet' rooms.

Supply and extract diffusers are fitted to the ceilings and are adjusted to balance the system.

The unit incorporates a polymer heat exchanger that tempers the incoming air before it is delivered to the habitable rooms.

The Domestic Building Services Compliance Guide specifies a maximum specific fan power of 1.5 W/l/s for MVHR systems.

Commissioning

MVHR systems must be commissioned in compliance with ADF with notification to Building Control and a copy provided for the owner/occupier.

Lo-Carbon Sentinel Kinetic Advance

Additional Advance Features

- Ultra quiet
- Touch screen controller
- Lightweight for easier install ation
- 100% Summer bypass
- WiFi connectivity option
- Wireless commissioning
- Pre-commissioning via USB
- App control option
- Left/Right handing through the controller
- Pre-heater option for cold climates
- Post-heater control option
- Developed and manufactured in the UK
- G3, M5 and F7 filter options

SAP PCDB Performance

	Thermal Efficiency %	SFP (W/l/s)
K+1	93	0.38
K+2	93	0.38
K+3	92	0.42
K+4	92	0.50
K+5	91	0.58
K+6	91	0.68
K+7	90	0.82

Lo-Carbon Sentinel Kinetic BH, FH

Additional Sentinel Features

- Programmable summer bypass
- Integrated digital controller for simple and accurate commissioning
- Plug and play controls: Humidistat, Vent-Wise, PIR
- Wired remote control and wireless boost options
- Volt-free inputs
- Adjustable delay-off timer
- BMS connectivity
- Self diagnosis for simplified fault finding
- 0V to 10V proportional control
- Purge setting
- Cooker hood option

Kinetic BH SAP PCDB Performance

	Temperature Efficiency %	SFP (W/l/s)
K+1	90	0.60
K+2	90	0.59
K+3	90	0.68
K+4	89	0.79
K+5	90	0.97

Kinetic FH SAP PCDB Performance

	Thermal Efficiency %	SFP (W/l/s)
K+1	90	0.53
K+2	89	0.51
K+3	88	0.56
K+4	87	0.65
K+5	85	0.75

Lo-Carbon Sentinel Kinetic Plus & High Flow

Additional Kinetic Plus Features

- 150mm spigots with 180mm and 200mm options
- Up to 200l/s (720m^3/hr at 150Pa)
- Hinged filter for simplified access

Kinetic Plus SAP PCDB Performance

	Temperature Efficiency %	SFP (W/l/s)
K+1	91	0.51
K+2	91	0.40
K+3	90	0.41
K+4	90	0.45
K+5	90	0.53
K+6	90	0.60
K+7	90	0.70

Kinetic High Flow SAP PCDB Performance

Exhaust Terminal Configuration	Thermal Efficiency %	SFP (W/l/s)
K + 1	88%	0.65
K + 2	88%	0.54
K + 3	90%	0.52
K + 4	90%	0.55
K + 5	91%	0.6
K + 6	91%	0.66
K + 7	90%	0.74

MEV/dMEV

House Specification

MEV/ dMEV	Airflow l/s Normal	Boost
Kitchen	10	13
Bathroom	6	8
WC	4	6
En-Suite	6	8
Total	**26**	**35**

Three bedrooms, kitchen/dining room, living room, WC, bathroom, en-suite floor area 85m^2

Whole dwelling rate (background, trickle or normal rate) calculate the rate from ADF, table 5.1b: 26l/s based on 'Note a'; 85m^2 x 0.3l/s = 26l/s

Calculate the extract ventilation rate (boost) from ADF, table 5.1a:
kitchen (13l/s) + WC(6/ls) + bathroom (8l/s) + en-suite (8l/s) = 35l/s.

Background Ventilators (if needed)

Living room	2500mm^2
Kitchen/dining	2500mm^2
Bed 1	2500mm^2
Bed 2	2500mm^2
Bed 3	2500mm^2
Total	**12500mm^2**

Apartment Specification

MEV/ dMEV	Airflow l/s Normal	Boost
Kitchen	9	13
Bathroom	6	8
Total	**15**	**21**

One bedroom, kitchen/dining/living room, bathroom floor area 50m^2.

Whole dwelling rate (background, trickle or normal rate) calculate the rate from ADF, table 5.1b:15l/s based on 'Note a'; 50m^2 x 0.3l/s = 15l/s.

Calculate the extract ventilation rate (boost) from ADF, table 5.1a:
kitchen (13l/s) + bathroom (8l/s) = 21l/s.

Background Ventilators (if needed)

Living/dining rm	2500mm^2
Bed 1	2500mm^2
Total	**5000mm^2**

Single room heat recovery ventilator (SRHRV) may be used in conjunction with MEV/dMEV systems.

Determine the whole dwelling rate as above (26 l/s). Calculate the room supply rate for the SRHRV: (Room volume x whole dwelling rate)/(Total volume of all habitable rooms) e.g. (36m^3 x 26l/s)/(132m^3) = 7l/s. The new whole dwelling rate for the MEV system is 19l/s. The SRHRV rate is 7l/s.

MVHR

House Specification

Extract	Airflow l/s Normal	Boost
Kitchen	10	13
Bathroom	6	8
WC	4	6
En-Suite	6	8
Total	**26**	**35**

Three bedrooms, kitchen/dining room, living room, WC, bathroom, en-suite floor area 85m^2.

Whole dwelling rate (background, trickle or normal rate) calculate the rate from ADF, table 5.1b: 26l/s based on 'Note a'; 85m^2 x 0.3l/s = 26l/s.

Extract	Airflow l/s Normal	Boost
Kitchen	10	13
Bathroom	6	8
WC	4	6
En-Suite	6	8
Total	**26**	**35**

Calculate the extract ventilation rate (boost) from ADF, table 5.1a: kitchen (13l/s) + WC (6l/s) + bathroom (8l/s) + en-suite (8l/s) = 35l/s.

House Dimensions:
Ground floor
8.5m x 5m x 2.4m (room height)
First Floor
8.5m x 5m x 2.4m (room height)
Total dwelling volume = 204m^3
204m^3 x 0.04l(s.m^3) = 8.2 l/s infiltration
Whole dwelling rate – Infiltration
26l/s - 8.2l/s = 17.8l/s

Apartment Specification

Extract	Airflow l/s Normal	Boost
Kitchen	9	13
Bathroom	6	8
Total	**15**	**21**

One bedroom, kitchen/dining/living room, bathroom floor area 50m^2.

Whole dwelling rate (background, trickle or normal rate) calculate the rate from ADF, table 5.1b: 15l/s based on 'Note a'; 50m^2 x 0.3l/s = 15l/s.

Extract	Airflow l/s Normal	Boost
Living/dining rm	9	13
Bathroom	6	8
Total	**15**	**21**

Calculate the extract ventilation rate (boost) from ADF, table 5.1a: kitchen (13l/s) + bathroom (8l/s) = 21l/s

Apartment Dimensions:
Ground floor
10m x 5m x 2.4m (room height)
Total dwelling volume = 120m^3
120m^3 x 0.04l(s.m^3) = 4.8l/s infiltration

Whole dwelling rate – Infiltration
15 l/s - 4.8 l/s = 10.2 l/s

For buildings leakier than 5m^3/(h.m^2), you must subtract natural infiltration from the whole dwelling (normal) rate: calculate the internal volume of the dwelling. Multiply the internal volume by 0.04l/(s.m^3) subtract this volume from the whole dwelling rate.

As part of the ongoing drive for energy efficiency within Europe, as of January 2016 ventilation devices over 30 Watts now come under the scope of the Energy Related Products Directive. The legislation sets minimum performance criteria across a range of fans and ventilation devices under two sets of legislation; 'residential' ventilation and 'non-residential' ventilation. Additional and stricter criteria came into force as of January 2018.

Residential Products

Residential Products has a secondary directive which requires some products to carry an energy label as described below:

MVHR and MEV products

These products do come into the scope of the legislation and will carry an energy label. There are some minimum energy efficiency requirements as well as the requirement for a summer bypass on heat recovery models.

Energy Efficiency Class

Products within the scope of ErP now need to carry a rating that shows their Energy Efficiency Class. This information is called a 'SEC Class' and is provided in all product literature and on the energy label.

A product's SEC class is affected by how the product is controlled. This is referred to as Local Demand Control (LDC) and indicates how many 'sensors' a fan should have. The regulations require that single room fans, such as a bathroom fan, should have at least 1 sensor. Units that are ducted, such as an MEV unit, need to have more than one sensor. Examples of these are a pull cord/light switch or humidistat.

In our literature, where appropriate we have shown the rating if an additional LDC was added to a product. In those cases, you will see a table similar to the one below which has a heading (incl LDC). This is so you can choose the most efficient option for your needs.

SEC Rating Example

Model	SEC Class*
Advance S/SX	A+

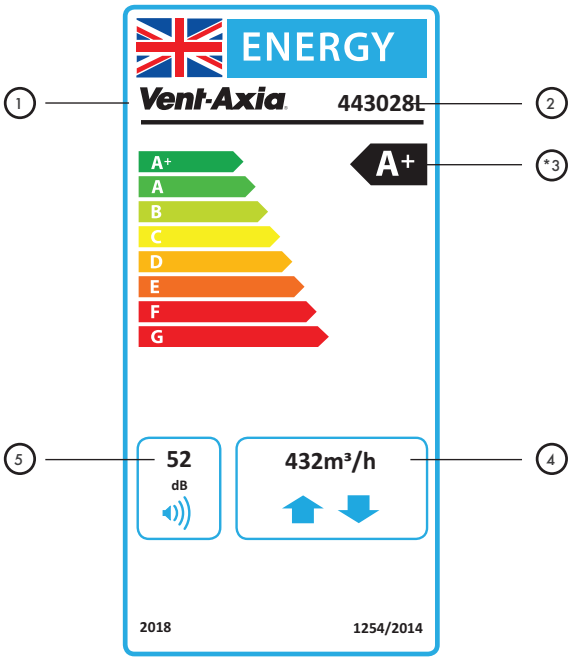

1 Manufacturers name 2 Model name 3 Energy Efficiency Class
4 Max flow rate 5 Sound Level

Non-Residential Ranges

Non-Residential products have had minimum performance and efficiency levels established, but there is no requirement to introduce energy labels. Some products have been updated with new motors and enabled for speed control.

Non-Residential ranges are split into a number of different categories dependent on their application and function. These can be described as follows:

1. Fans
2. Uni-directional Ventilation Units
3. Bi-directional Ventilation Units

There are very few suppliers of products and services within the building and construction industry that can provide a complete and fully integrated service to their clients.

With over 80 years' ventilation experience, Vent-Axia continues to lead the way in the development of new products and systems. As legislation drives the development of ventilation systems and services Vent-Axia provides a dedicated team of mechanical ventilation systems experts within the Vent-Axia New Build - Residential Team.

This experienced systems ventilation team and the full support service provides the contractor with an alternative to specially trained internal staff and hence reduces the liabilities for the client.

Design

Vent-Axia Design Support Service
From an initial enquiry Vent-Axia will take full responsibility of system design, supply of its equipment, commissioning and balancing. Completed Inspection Checklists are provided for the client and contractor.

Vent-Axia firmly believes significant advantages can be achieved by its clients in having all diverse and complex project services integrated under one roof. Key advantages are effective co-ordination, economies of scale and a seamless support structure. Vent-Axia has a dedicated team of experienced, highly qualified technicians, service personnel and engineers who are at the forefront of engineering technology.

From Enquiry to Project
Once an enquiry has been received, either direct from the customer or following a site visit by one of Vent-Axia's experienced field representatives, a dedicated team is assigned to the project.

Project to Design
Using bespoke ventilation computer aided design software, Vent-Axia will produce sample system designs, showing unit location, ducting runs, air flow rates and noise considerations. This enables the designer to produce an accurate price for the supply of ventilation unit, ducting and accessories for the whole development.

Product Supply

With over 2000 distributors nationwide, Vent-Axia can ensure availability and on-time service to site.

Commission

Commissioning and Balancing
Commissioning and balancing is undertaken by Vent-Axia Supervisors or approved contractors. Using anemometer hoods, airflow readings are taken and recorded on commissioning sheets.

Any adjustments to the unit or the adjustable diffusers are made to ensure the system meets the design intent. This stage is essential to ensure that the installed performance requirements of the Building Regulations are satisfied. Vent-Axia can provide installation training certified by NICEIC to ensure installation, commissioning and balancing are conducted using best practice.

Complete Project
When a project has been completed, the Vent-Axia commitment does not end. A full handover pack for each property will be provided including the completed Air Flow Calculation Sheets and Operating and Maintenance manuals. The handover pack also includes a copy of the system design, fitting and wiring documentation and commissioning figures.

After Sales Service
Experience in the marketplace shows that products will last longer and operate more efficiently when properly serviced. Vent-Axia clients entrust the company to care for their installed equipment and in so doing gain significant benefits in terms of improved environmental conditions, reduced downtime, greater energy efficiency, reduced running costs and lower capital expenditure.

System 1 Intermittent Extract Fans

ADF System 1
Continuing our commitment to Lo-Carbon we are proud to introduce the latest additions to the range. In this section you will find Lo-Carbon solutions for any intermittent fan application.

In axial or centrifugal, wall, ceiling or window applications in bathrooms or kitchens we have a Lo-Carbon fan offering up to 90% energy saving over the equivalent traditional fan.

We are the first manufacturer in the UK to provide such a complete offer at a price point which makes these products a real alternative.

Vent-Axia

	NEW NBR High Pressure Axial Fan Range Bathroom/Toilet Fan	16 - 17
	Lo-Carbon Silhouette® 100/SELV Bathroom/Toilet Fan	18 - 19
	Lo-Carbon Silhouette® 125 Bathroom/Toilet Fan	20
	Lo-Carbon Silhouette® 150 Kitchen Fan	21
	Lo-Carbon Solo Plus/SELV Centrifugal Bathroom/Toilet Fan	22 - 23
	Lo-Carbon Minivent Ducted Bath/Shower Fan Kit	24
	Slimline 100 & 150	23
	Eclipse 100 & 150	26 - 27
	Solo Plus®	28 - 29
	Centrif® Duo Plus	30 - 31
	ACM 100-200	32 - 33
	ACM 250-315	34 - 35

NBR High Pressure Axial Fan Range

- Designed to perform under pressure
- Compliant with System 1 from Approved Document F
- High performance, low power
- Open front grille design
- As low as 22dB(A) noise levels
- 100mm, 125mm and 150mm options to choose from
- As low as 5W power consumption
- Timer, Humidity and PIR options now available
- 5 Year Warranty
- IP45

The NBR High Pressure Axial Fan range offers high powered axial ventilation with a wide range of control and sizing options. This ensures that all your sites look consistent and that your teams can spend less time figuring out how to install different fans and focus on more important things.

The NBR High Pressure Axial Fan range is an intermittent fan family that offers a stylish appearance with high pressure capabilities meaning more duct for the same fan. A 100mm NBR High Pressure Axial Fan can withstand 18Pa back pressure while still achieving the 15l/s building regulations requirement for a bathroom.

With a highly efficient AC motor, the NBR High Pressure Axial Fan range can achieve energy efficient and also quiet ventilation with power consumption as low as 5W and noise levels as low as 22dB(A) at 3m.

Model

Model	Stock Ref
100mm Basic	496575
100mm Timer	496576
100mm Humidity Timer	496577
100mm PIR	496578
125mm Basic	496579
125mm Timer	496580
125mm Humidity Timer	496581
150mm Basic	496582
150mm Timer	496583
150mm Humidity Timer	496584

Dimensions (mm)

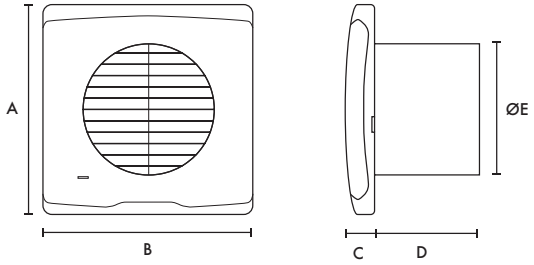

Model	A	B	C	D	ØE
NBR High Pressure Axial Fan100mm	160	160	22	80	99
NBR High Pressure Axial Fan 125mm	185	185	29	100	120
NBR High Pressure Axial Fan150mm	227	227	30.5	111	146

Performance Guides

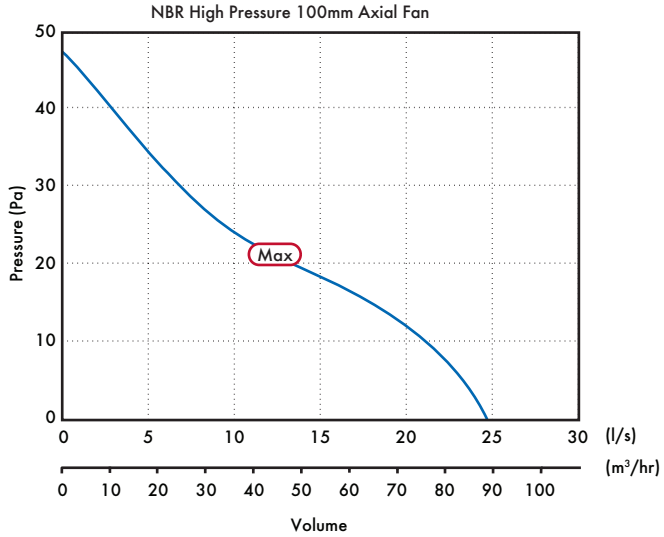

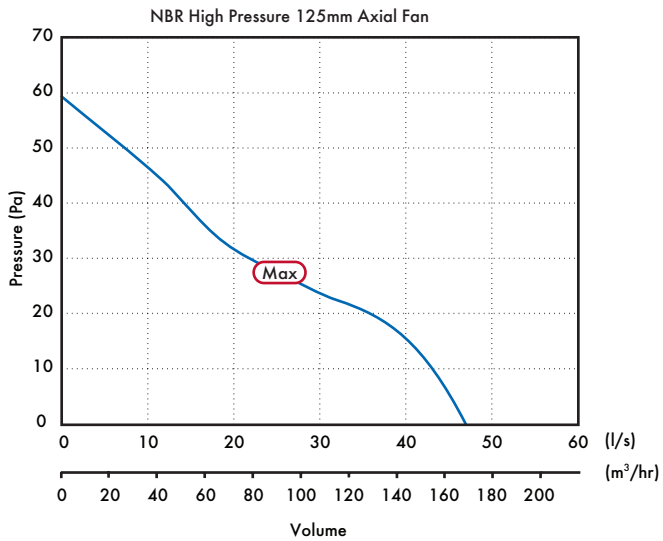

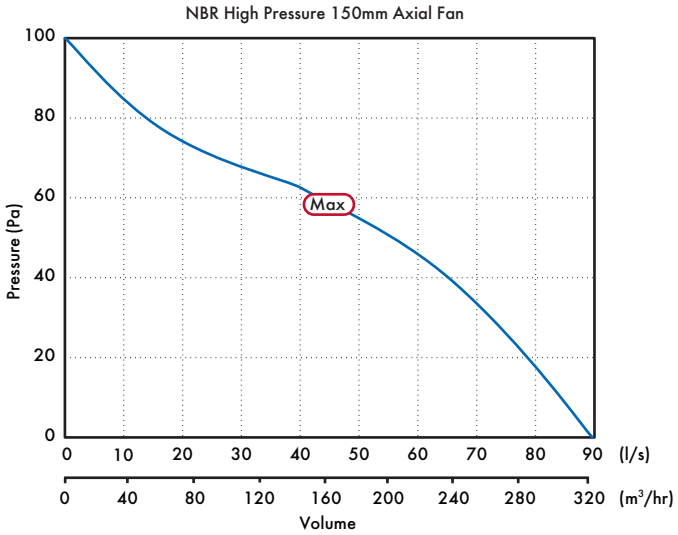

Technical Data

Model	Speed	Motor Power (W)	Performance (l/s)	Sound @ 3m dB(A)	IP rating
NBR High Pressure Axial Fan 100mm	High	7.5	24.7	33.0	IP45
	Low*	5.0	20.0	22.0	IP45
NBR High Pressure Axial Fan 125mm	High	14.0	47.5	37.3	IP45
	Low*	10.5	25.0	29.0	IP45
NBR High Pressure Axial Fan 150mm	High	19.0	90.0	43.0	IP45
	Low*	9.0	37.0	32.0	IP45

*Low Speed - HT Models only

Lo-Carbon Silhouette 100/SELV

- Models Basic/Timer/Humidity & Timer
- Low power consumption - Lower running costs
- Fully opening and closing non-transparent shutters - Improved insulation and privacy
- Meets current Building Regulations Approved Document F & L
- 1 of 2 speeds selectable at installation
- Blue power indication light (except B model) - Modern aesthetics
- Ball bearing motors for vertical or horizontal application
- Unique humidity sensor track - Improved response
- 5 year motor warranty
- IPX4 rated - IPX7 rated (SELV)
- Suitable for wall, ceiling, panel and window mounting

Slimline Bathroom Ventilation

With a slim profile of only 17mm, Lo-Carbon Silhouette blends in with the wall surface to provide an unobtrusive installation. Lo-Carbon Silhouette has an FID performance of up to 30l/s. It can be ceiling/panel mounted and connected to an appropriate duct run to the outside.

Safety Extra Low Voltage (SELV) Fan

Safety Extra Low Voltage (SELV) is designed for areas where a fan has to be fitted within zone 1 in a room containing a fixed bath or shower according to IEE wiring regulations. The Silhouette SELV can be safely installed within the spray area. The fan is rated IPX7, control is by the supplied mains safety isolating transformer with 12V DC SELV output, which is sited away from any source of spray and out of reach of a person using a fixed bath or shower. SELV transformer to BS EN 60742.

Models

Lo-Carbon Silhouette 100B/SELV 100SVB

100mm bathroom/toilet fan with back draught shutter.

Model	Stock Ref
100B	441624
SELV 100SVB	441511

Lo-Carbon Silhouette 100T/ SELV 100SVT (Timer)

100mm bathroom/toilet fan with integral adjustable electronic overrun timer (5-30 minutes), indicator light which operates on manual override only, and back draught shutter.

Model	Stock Ref
100T	441625
SELV 100SVT	441512

Lo-Carbon Silhouette 100HT (Humidistat/Timer)

100mm bathroom/toilet fan with adjustable auto humidity sensor from 60-90% RH and overrun timer, indicator light which operates on manual override only, and back draught shutter.

Model	Stock Ref
100HT	441626

Lo-Carbon Silhouette 100H SELV (Humidistat)

100mm bathroom/toilet fan with ambient response humidity sensor from 60-90% RH, indicator light which operates on manual override only, and back draught shutter.

Safety Extra Low Voltage version.

Model	Stock Ref
SELV 100SVH	441513

Accessories

Wall Kit

Fixing hole diameter 117mm∅

Model	Stock Ref
Wall Kit White	254102
Wall Kit Brown	254100

Window Kit

Fixing hole diameter 117mm∅

Model	Stock Ref
Window Kit	442947

17mm actual profile

Dimensions (mm)

Panel

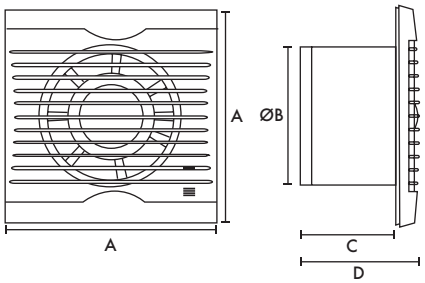

Wall Kit

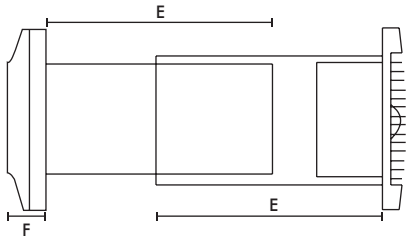

A	BØ	C	D	E	F
160	99	115	132	200	32

SELV Transformer (W X H X D) 87 X 87 X 33

Weight 0.6kg

Performance Guide

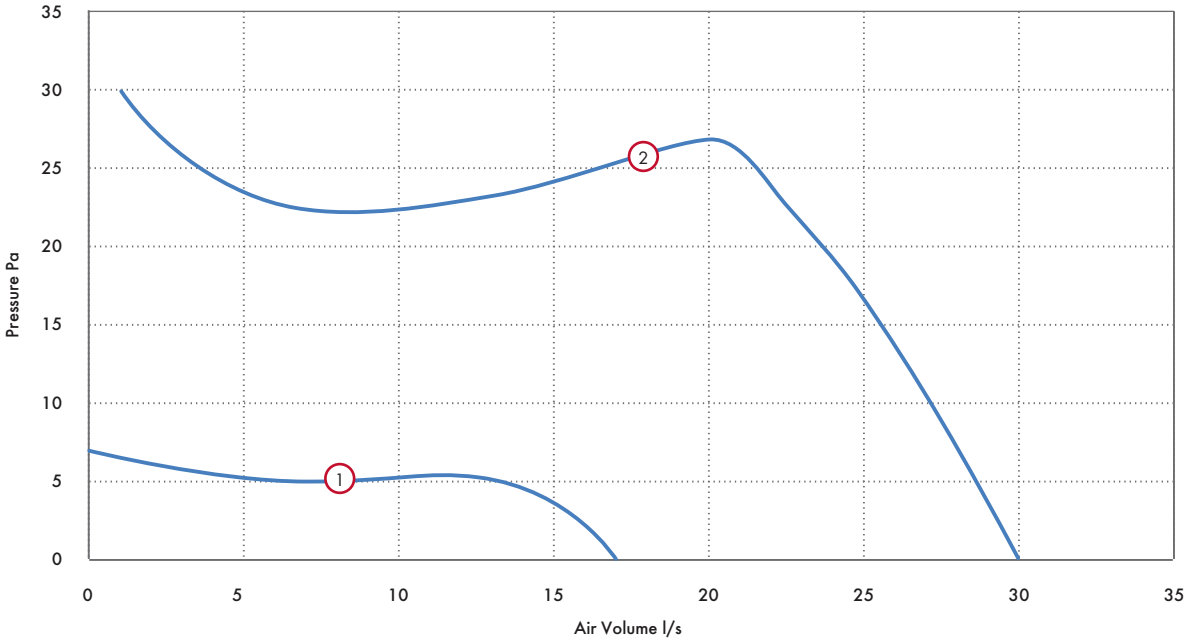

Area	Model	Curve Ref	Extract Performance - FID m³/h	l/s	Watts	Sound dB(A) @ 3m	SFP (W/l/s) @ 0Pa
Toilet	Lo-Carbon Silhouette 100 B/T/HT/SVB/SVT/SVH	1	60	17	3.4	34	0.20
Bathrooms		2	108	30	8.7	38	0.30

For window mounting: shutter cannot be used and must be removed

Lo-Carbon Silhouette 125

- Models Basic/Timer/Humidity & Timer
- Low power consumption - Lower running costs
- Quiet running
- Fully opening and closing non transparent shutters - Improved insulation and privacy
- 1 of 2 speeds selectable at installation
- IPX4 rated
- Ball bearing motors for vertical or horizontal application
- Unique humidity sensor track - Improved response
- 5 year motor warranty
- Suitable for wall, ceiling and panel mounting

Slimline Bathroom Ventilation

With a slim profile of only 18mm, Lo-Carbon Silhouette blends in with the wall surface to provide an unobtrusive installation. Lo-Carbon Silhouette has a FID performance up to 160m³/h. It can be ceiling/panel mounted and connected to an appropriate duct run to the outside.

Models

Lo-Carbon Silhouette 125B

125mm bathroom/toilet fan with indicator light and back draught shutter.

Model	Stock Ref
125B	446483

Lo-Carbon Silhouette 125T (Timer)

125mm bathroom/toilet fan with integral adjustable electronic overrun timer (5-30 minutes), indicator light which operates on manual override only, and back draught shutter.

Model	Stock Ref
125T	446484

Lo-Carbon Silhouette 125HT (Humidistat/Timer)

125mm bathroom/toilet fan with integral adjustable auto humidity sensor from 60-90% RH and overrun timer, indicator light which operates on manual override only, and back draught shutter. Datalogger as standard on all Lo-Carbon humidity controlled Silhouette fans.

Model	Stock Ref
125HT	446485

Accessories

Model	Stock Ref
Wall Kit White	455226

Dimensions (mm)

Panel

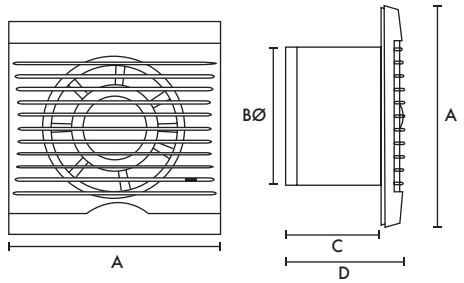

A	BØ	C	D
187	125	131	149

Performance Guide

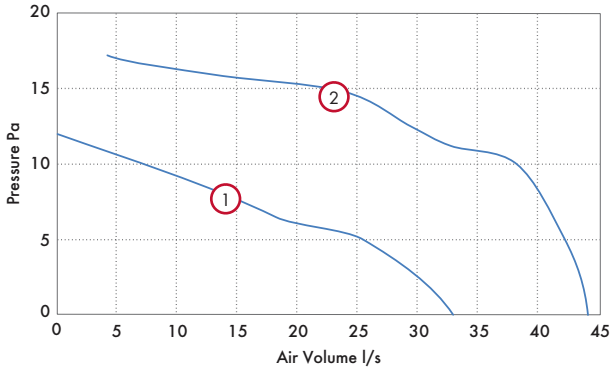

Model		Curve Ref	Extract Performance m³/h	l/s	Watts	Sound dB(A) @ 3m	SFP (W/l/s) @ 0Pa
Lo-Carbon Silhouette 125B/T/HT	Low	1	120	33	4.5	33	0.14
	High	2	160	44	8	37	0.18

Lo-Carbon Silhouette 150

- Stylish ultra low profile grille
- Downstream airflow guide vanes for improved pressure development
- Ball bearing motors for vertical or horizontal application
- Wall kit design meets Building Regulations Approved Document F requirements
- 5 year Motor Warranty
- 1 of 2 speeds selectable at installation
- IPX4 rated
- Low Specific Fan Power
- Suitable for wall, ceiling and panel mounting

Slimline Lo-Carbon Kitchen Ventilation

The Lo-Carbon Silhouette 150 range is designed for modern living. With a profile of only 19mm on the kitchen models, Lo-Carbon Silhouette blends in with the wall surface to provide an unobtrusive installation.

Mounted in the centre of the fan, beneath the ultra slim profile grille, are the electronics, incorporating a humidistat (HT model) for detecting a change in internal humidity or an overrun timer option that is adjustable between 5 and 30 minutes. FID performance of 65l/s, double insulated. Power consumption only 9 Watts.

Models

Lo-Carbon Silhouette 150B

150mm kitchen fan with indicator light and back draught shutter.

Model	Stock Ref
150B	441628

Lo-Carbon Silhouette 150T (Timer)

150mm kitchen fan with integral adjustable electronic overrun timer (5-30 minutes), indicator light which operates on manual override only and spring back draught shutter.

Model	Stock Ref
150T	441629

Lo-Carbon Silhouette 150HT (Humidistat/Timer)

150mm with integral adjustable auto humidity sensor from 60-90% RH and overrun timer, indicator light which operates on manual override only and back draught shutter. Datalogger as standard on all Lo-Carbon humidity controlled Silhouette fans.

Model	Stock Ref
150HT	441630

Accessories

Model	Stock Ref
Wall Kit White	140902
Wall Kit Brown	140903

Dimensions (mm)

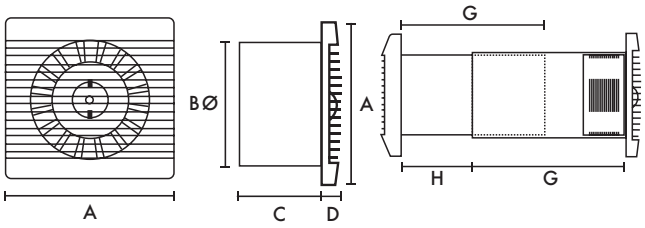

A	BØ	C	D	G	H
223	147	130	19	220	37

Weight 1.75kg

Performance Guide

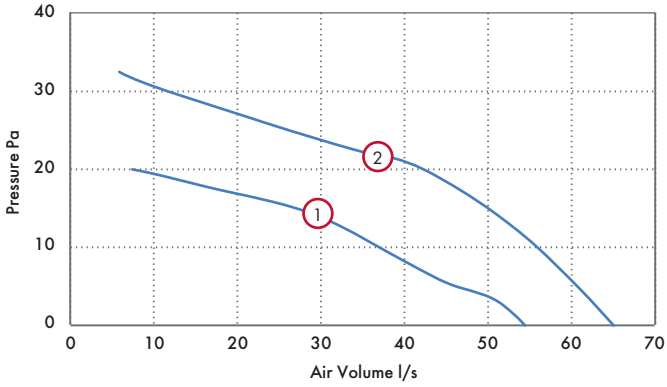

Model	Setting	Curve Ref	Extract Performance m³/h	l/s	Watts	Sound dB(A) @ 3m	SFP (W/l/s) @ 0Pa
150B/T/HT	Utility Setting	1	200	55	6	35	0.11
	Kitchen Setting	2	234	65	9	43	0.14

Fixing hole diameter 152mmØ (when wall kit used)

Lo-Carbon Solo Plus/SELV

- Up to 70% energy saving
- Filterless as standard - innovative impeller design means no need for a filter
- 5 year Lo-Carbon motor warranty
- Meets current Building Regulations Approved Documents F & L
- IPX4 rated - IPX7 rated (SELV)
- Flush or surface mountable with adjustable rear or side exit spigot
- SELV models suitable for installation over or within reach of a shower or bath
- Extremely low sound levels
- Suitable for wall, ceiling and panel mounting
- SELV Models - Supplied with a remote transformer

the ELECTRICAL industry awards WINNER 2013

Long Life Ventilation

The Lo-Carbon Solo Plus range from Vent-Axia has been specially designed for through the wall and ducted applications, suitable for internal bathrooms, toilets and other small rooms. Finished in white, the Lo-Carbon Solo Plus can be flush or surface mounted, with a 2 position 100mm circular spigot for rear entry or connecting to a vertical ducting system. The powerful centrifugal impeller allows installations using 100mm ducting in straight runs, whilst still achieving 15l/s as required by Building Regulations Approved Document F.

Continuous running products, such as the Lo-Carbon Solo Plus, installed in all wet areas of a dwelling are classed as a wholehouse ventilation system and therefore only need to move the amount of air as outlined in table 5.1a and 5.1b of Building Regulations Approved Document F.

The Lo-Carbon Solo Plus has an adjustable boost speed which is set at installation variable between a wall or duct setting for boost/override operation to meet Building Regulations thus ensuring minimum energy usage and low sound levels. All models have an optional speed for constant trickle ventilation (12l/s), selectable at installation. Depending on the model, the fan will switch from trickle (if selected) to boost via the pullcord/light switch/humidity sensor/PIR.

All models can be wall, panel or ceiling mounted and can be connected to either circular, rectangular or Vent-Axia's flat ducting. Enclosure of the electrical components is manufactured from flame retardant grade material.

Safety Extra Low Voltage Fan (SELV)

Designed for areas where a fan has to be fitted over or within Zone 1 in a room containing a fixed bath or shower according to IEE wiring regulations (BS 7671), the Lo-Carbon Solo Plus SELV fan can be safely installed within the spray area. The fan is rated IPX7. Control is by the supplied mains safety isolating transformer unit with 12V DC SELV output, which is sited away from any source of spray and out of reach of a person using a fixed bath or shower. Controller Supply voltage 220-240V/1/50Hz. Output to fan SELV 12V DC.

Models

Lo-Carbon Solo Plus P/SELV P (Pullcord)

Flush or surface mountable. Control by Pullcord. 2 Speed. Constant trickle option. Adjustable boost. In-built Lo-Carbon controller.

Model	Stock Ref
P	427481
SELV P	427485

Lo-Carbon Solo Plus T/SELV T (Timer)

Flush or surface mountable. Control by room light or switch. 2 Speed. Constant trickle option. Adjustable boost. Adjustable timer overrun. Delay on timer. In-built Lo-Carbon controller.

Model	Stock Ref
T	427482
SELV T	427486

Lo-Carbon Solo Plus HT/SELV HT (Humidistat/Timer)

Flush or surface mountable. Humidity controlled fan with override pullcord. Constant trickle option. Adjustable boost. Adjustable timer overrun. Delay on timer. Adjustable humidity sensor. In-built Lo-Carbon controller. Datalogger as standard on all Lo-Carbon humidity controlled Solo Plus fans.

Model	Stock Ref
HT	427483
SELV HT	427487

Lo-Carbon Solo Plus TM/SELV TM (Timer/PIR)

Flush or surface mountable. Control by integral PIR detector. 2 Speed. Constant trickle option. Adjustable boost. In-built Lo-Carbon controller.

Model	Stock Ref
TM	427484
SELV TM	427488

Accessories

Lo-Carbon Solo Plus Bezel

Used when flush mounting - reduces the need to make good.

Model	Stock Ref
Bezel	404106

Model	Stock Ref
Wall Kit White	254102
Wall Kit Brown	254100

Filter Pack (1 per pack)

The design of the Lo-Carbon Solo Plus means that it does not need a filter. However, if you are going to install the product in a heavily greasy environment, you may want to protect the product by fitting a filter.

Model	Stock Ref
Filter Pack	449265

Dimensions (mm)

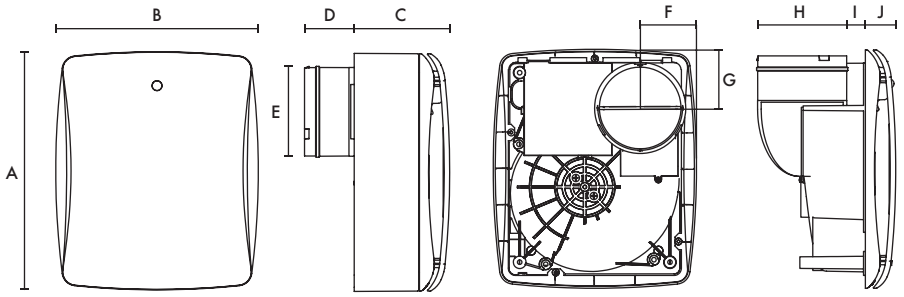

A	B	C	D	EØ	F	G	H	I	J
263	224	106	55	98	62	65	98	21	34

Weight 2.2kg, SELV Weight 2.7kg. Dimensions: (W x H x D) 87x87x33mm.

Performance Guide (Duct Mode)

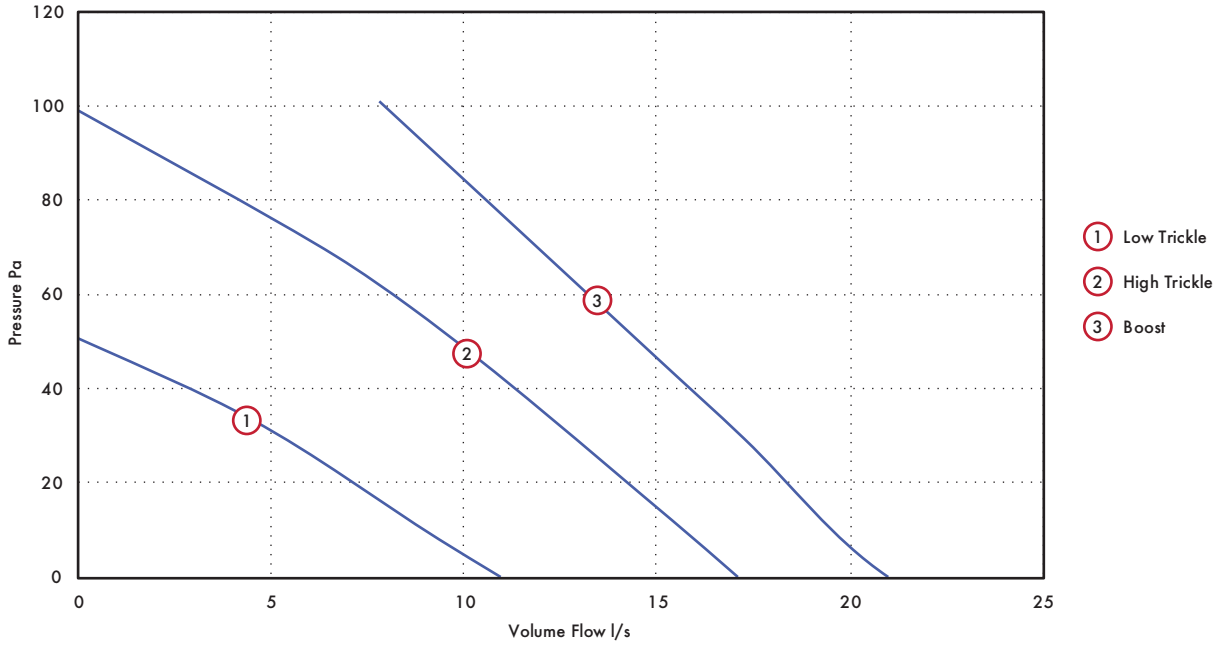

Model		Extract Performance l/s (m³/h)			Power consumption - Watts			dB(A) @ 3m			SFP (W/l/s)
		Boost	High trickle	Low Trickle	Boost	High trickle	Low Trickle	Boost	High trickle	Low Trickle	@ 0Pa
Lo-Carbon Solo Plus/SELV P/T/HT/TM	Wall mode	18 (64.8)	12 (43.2)	8 (28.8)	6	2.9	2.3	33.5	27	23.5	0.28
	Duct mode	21 (75.6)	17 (61.2)	11 (39.6)	8.4	5.3	3.2	35.5	33	26	0.29

Tested at 240VAC @ 50Hz

Lo-Carbon Minivent

- Complete kit supplied
- Meets Building Regulations Approved Document F & L requirements for toilets and bathrooms at max 1.5m of ducting and 1x 90° bend
- Adjustable timer version available
- 5 year Motor Warranty
- 1 of 2 speeds selectable at installation

Powerful Lo-Carbon In-Line Fan Kit

The Vent-Axia Lo-Carbon Minivent ducted bath/shower kit includes all the components necessary to install a ducted 100mm system. This simplifies fitting of an efficient ventilation system to small rooms including bathrooms, shower rooms and toilets. It is especially suitable for en-suite bathrooms.

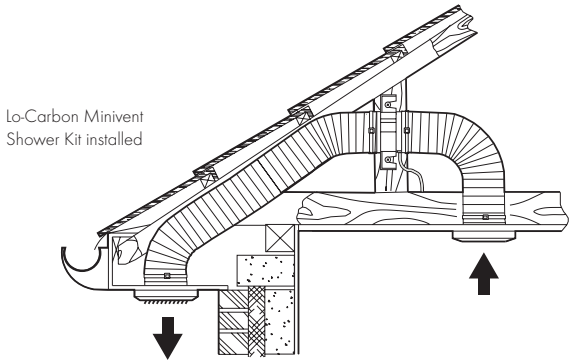

When installed, the fan kit has ample performance to meet the Building Regulations requirements for toilets and bathrooms. The timer version should be used for internal rooms.

The kit consists of a Lo-Carbon Minivent In-Line fan, a white ceiling grille and spigot, 3 metres of flexible duct and an external louvre for soffit or wall mounting. The duct should be cut to the required length and the bend radius kept to a maximum to provide optimum fan performance.

Enclosed terminal compartment, Class 2 appliance. Supply voltage 220-240/1/50Hz.

Models

Lo-Carbon Minivent Shower Fan (Basic)

Comprises - high output tube fan, 3 metres of flexible duct, ceiling inlet grille and spigot, soffit/wall outlet grille.

Model	Stock Ref
Basic	441421

Lo-Carbon Minivent Shower Fan (Timer)

Comprises high output tube fan, 3 metres of flexible duct, ceiling inlet grille and spigot, soffit/wall outlet grille.

Model	Stock Ref
Timer	441422

Dimensions (mm)

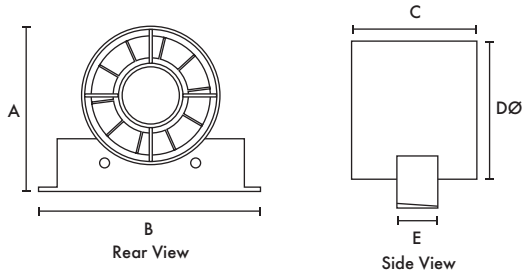

A	B	C	DØ	E
130	155	90	98	27

Internal/External Grille Dimensions 140x140mm
Transformer (W x H x D) 87 x 87 x 33

Performance Guide

	Extract performance FID			Sound dB(A)	SFP (W/l/s)
Model	m^3/h	l/s	Watts	@ 3m	@ 0Pa
Lo-Carbon Minivent B/T	110	31	6.5	23	0.21

Slimline 100 & 150

- Provides performance of 15 l/s (54m³/h) - bathrooms and 60 l/s (216m³/h) - kitchens to comply with Building Regulations ADF
- Wall or ceiling mounting
- Model options include basic and timer control
- Integral backdraught shutter
- Complementary range of sensors available
- IP44 rated - 100mm
- IPX4 rated - 150mm

Bathroom & Kitchen Ventilation

100mm and 150mm panel axial fans for bathrooms, cloakrooms and kitchens. Slim profile only 15mm. Suitable for wall or panel mounting using the appropriate fixing kit.

Models

Bathroom/Toilet

BAS100SLB

Single speed axial fan with integral back draught shutter for remote or light switch operation.

Stock Ref

436530

BAS100SLT

Single speed axial fan with electronic overrun timer – up to 30 mins and integral back draught shutter.

Stock Ref

436532

Kitchen

BAS150SLB

Axial fan with integral back draught shutter for remote or light switch operation.

Stock Ref

436533

BAS150SLT

Axial fan with electronic overrun timer – and integral back draught shutter.

Stock Ref

436535

Dimensions (mm)

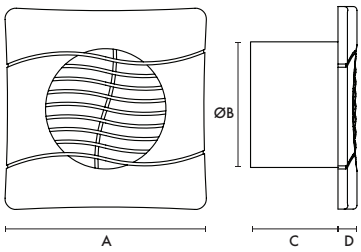

*100 model shown

Model	A	BØ	C	D	kg
Slimline 100	160	99	115	17	0.6
Slimline 150	223	147	130	19	1.75

Performance

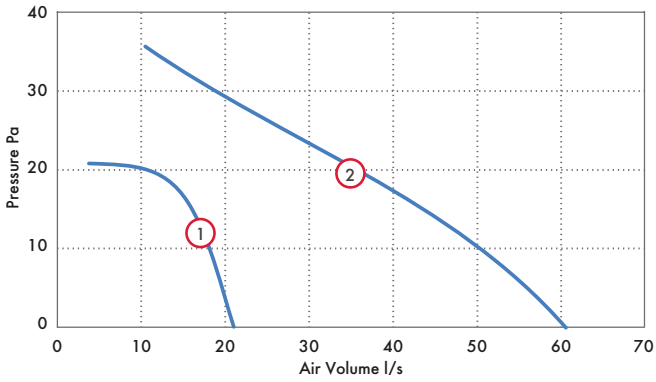

Model	Curve Ref	Extract Performance m³/h	l/s	Watts	dB(A) @ 3m	SFP (W/l/s) @ 0Pa
BAS100SLB/SLT	1	76	21	15	38	0.49
BAS150SLB/SLT	2	227	63	16	45	0.25

Tested at 240V 50Hz

Eclipse 100 & 150

- Wall or ceiling mountable
- Integral back draft shutter mechanism
- Meets current Building Regulations Approved Document F
- 100mm and 150mm size options
- Fixing kits available
- Fan IP44 rated -100mm
- Fan IPX4 rated -150mm

Bathroom Ventilation

The Eclipse range of circular axial fans is designed to be installed in kitchens and bathrooms. Its simple design provides an unobtrusive fitting that is sympathetic with most interiors.

Models

ECLIPSE 100X

Single speed 100mm bathroom/toilet fan with back draught shutter.

Model	Stock Ref
100X	427310

ECLIPSE 100XP

Single speed 100mm bathroom/toilet fan with pullcord and back draught shutter.

Model	Stock Ref
100XP	427281

ECLIPSE 100XT

Single speed 100mm bathroom toilet fan with integral adjustable overrun timer (5-30 minutes) and back draught shutter.

Model	Stock Ref
100XT	427282

ECLIPSE 150X

Single speed 150mm kitchen fan with back draught shutter.

Model	Stock Ref
150X	427283

ECLIPSE 150XP

Single speed 150mm Kitchen fan with pullcord and shutter.

Model	Stock Ref
150XP	427313

Accessories

Model	Stock Ref
Bezel Chrome 100mm	436480
Bezel Silver 150mm	436483
Wall Kit White 150mm	140902
Wall Kit Brown 150mm	140903
Wall Kit White 100mm	254102
Wall Kit Brown 100mm	254100

Dimensions (mm)

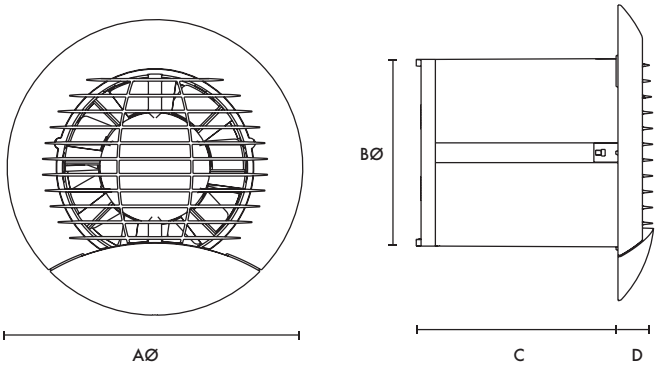

Model	AØ	BØ	C	D
Eclipse 100	157	99	107	19
Eclipse 150	201	144	123	19

Performance

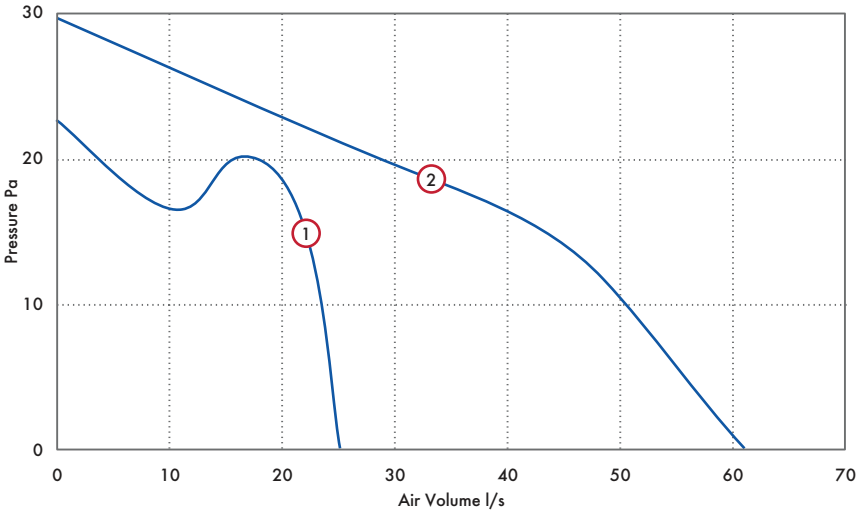

Model	Curve Ref	Extract Performance m³/h	l/s	Watts	dB(A) @ 3m	SFP (W/l/s) @ 0Pa
Eclipse 100	1	90	25	14	38	0.49
Eclipse 150	2	220	61	16	45	0.25

Tested at 240V 50Hz

Solo Plus

- Filterless as standard - innovative impeller design means no need for a filter
- Meets current Building Regulations Approved Documents F & L requirements for domestic bathrooms and toilets
- IPX4 rated
- Flush or surface mountable
- Adjustable rear or side exit spigot
- Extremely low sound levels
- Suitable for wall, ceiling and panel mounting

Bathroom & Toilet Ventilation

The Solo Plus range from Vent-Axia has been specially designed for through the wall and ducted applications, suitable for internal bathrooms, toilets and other small rooms. Finished in white, the Solo Plus can be flush or surface mounted, with a 100mm circular spigot for rear entry or connecting to a vertical ducting system. The spigot can also be adjusted for sideways exhaust enabling recessed ceiling installations within limited ceiling voids. The powerful centrifugal impeller allows for installations with longer duct runs using 100mm ducting, whilst still achieving 15 l/s as required by Document F of the current Building Regulations.

Continuous running products, such as the Solo Plus installed in all wet areas of a dwelling are classed as a wholehouse ventilation system and therefore, only needs to move the amount of air as laid down in table 1.1b of Document F.

The Solo Plus has a choice of two boost/override motor speeds set at installation, medium (17l/s) or high (22l/s), with an optional constant trickle speed (9l/s), also selectable at installation except in the P model. Depending on the model, the fan will switch from trickle (if selected) to boost (medium or high) via the pullcord/light switch/humidity sensor/PIR.

All models can be wall, panel or ceiling mounted and can be connected to either circular, rectangular or Vent-Axia's flat ducting. Enclosure of the electrical components is manufactured from flame retardant grade material.

Supply voltage 220-240V/1/50Hz.

Models

Solo Plus P (Pullcord)

Flush or surface mountable. Control by pullcord single speed; 1 of the 3 speeds selectable at installation.

Model	Stock Ref
P	427477

Solo Plus T (Timer)

Flush or surface mountable. Constant trickle option. 2 Speed. Adjustable timer overrun. Delay on timer option.

Model	Stock Ref
T	427478

Solo Plus HT (Humidistat/Timer)

Flush or surface mountable. Humidity controlled fan with override pullcord. Constant trickle option. Adjustable timer overrun. Delay on timer option. Adjustable humidity sensor.

Model	Stock Ref
HT	427479

Solo Plus TM (Timer/PIR)

Flush or surface mountable. Control by integral PIR detector. Constant trickle option. 2 Speed.

Model	Stock Ref
TM	427480

Accessories

Solo Plus Bezel

Used when flush mounting, reduces the need to make good.

Model	Stock Ref
Bezel	404106

Model	Stock Ref
Wall Kit White	254102
Wall Kit Brown	254100

Filter pack (1 per pack)

The design of the Solo Plus means that is does not need a filter. However, if you are going to install the product in a heavily greasy environment, you may want to protect the product by fitting a filter.

Model	Stock Ref
Filter pack	449265

Dimensions (mm)

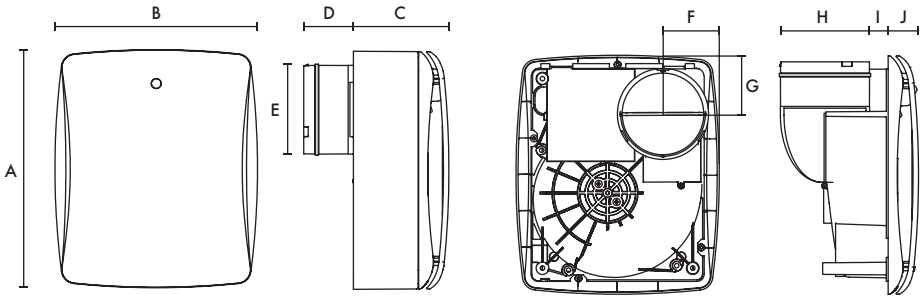

A	B	C	D	EØ	F	G	H	I	J
263	224	106	55	98	62	65	98	21	34

Performance Guide

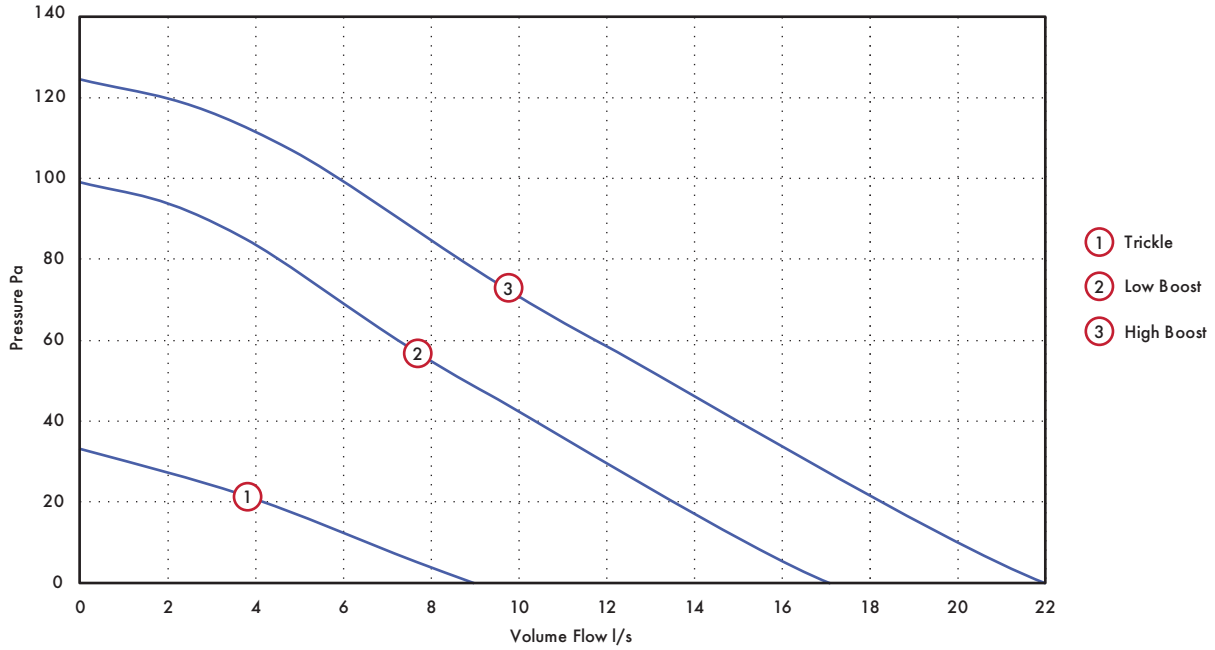

	Extract Performance l/s (m³/h) - FID			Watts			dB(A) @ 3m		
Model	Max Boost	Min Boost	Trickle	Max Boost	Min Boost	Trickle	Max Boost	Min Boost	Trickle
Solo Plus P/T/HT/TM	22 (80)	17 (61)	9 (32)	17.1	10.9	6.3	34.5	24	11.5

Tested at 240VAC @ 50Hz

Centrif Duo Plus

- Meets current Building Regulations Approved Document F
- Optional filter available
- Easy installation
- Fan can be wall or ceiling mounted
- Suitable for both kitchen and utility rooms
- Constant trickle boost speed available on DP & HTP models
- IPX4 Rated

Ultra Quick Ventilation

Centrif Duo Plus is designed to provide extraction levels that comply with Building Regulations Approved Document requirements, with special humidity sensing variants for local authority use.

The Centrif Duo Plus is for kitchens and utility rooms and large bathrooms. Surface mounting directly into standard 100mm diameter ducting, through the wall or ceiling installation.

Fast Installation

The Centrif Duo Plus has a 100mm circular spigot. The Flush mounting kit enables the spigot to be converted to a side outlet.

The spigot also encloses a built-in, spring operated back draught shutter. The Centrif Duo Plus Range can be wall mounted using a telescopic wall fitting kit available as an accessory (requires a 115mm diameter hole). For ceiling applications the range is ducted either through a soffit outlet or roof cowl assembly. There is convenient access for wiring which accommodates surface or recessed installation.

Improved Humidistat Control

Humidistat is selectable for either kitchen or utility speed separate to any other control to reduce nuisance noise. Boost operation by pullcord or switch live.

Models

Centrif Duo Plus P (Pullcord)

Two speed kitchen extract fan with pullcord. Choice of two speeds for boost, set at installation.

Model	Stock Ref
P	431613

Centrif Duo Plus T (Timer)

Two speed with adjustable timer between 2-30 minutes. Choice of two speeds for boost, set at installation.

Model	Stock Ref
T	431614

Centrif Duo Plus DP (Two speed)

Two speed and Off with pullcord or remote switch. Switches between Off, low and one of the 2 boost speeds.

Model	Stock Ref
DP	431615

Centrif Duo Plus HTP (Humidity/ Timer/ Pullcord)

Intermittent on 1 of 2 speeds (Utility or Kitchen selectable at installation). Operation by integral humidity sensor or pullcord. Separate speeds selectable for humidistat and pullcord. Optional continuous trickle speed available at installation.

Model	Stock Ref
HTP	431616

Accessories

Flush Mounting Kit

Bezel, clips and 90° duct elbow reduces the need to make good.

Model	Stock Ref
Flush Mounting Kit	439256

Model	Stock Ref
Centrif Duo Plus Filter	439927
Wall Kit White	254102
Wall Kit Brown	254100
Decoration Frame	442551

Dimensions (mm)

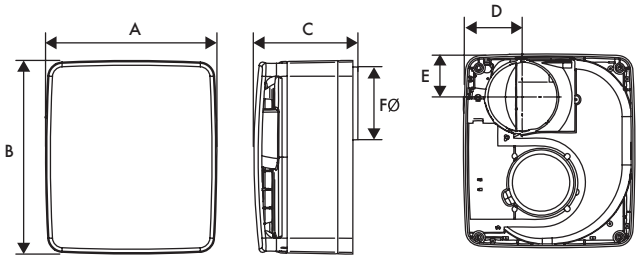

A	B	C	D	E	FØ
231	261	140	79	58	98

Weight 1.75kg

Performance Guide

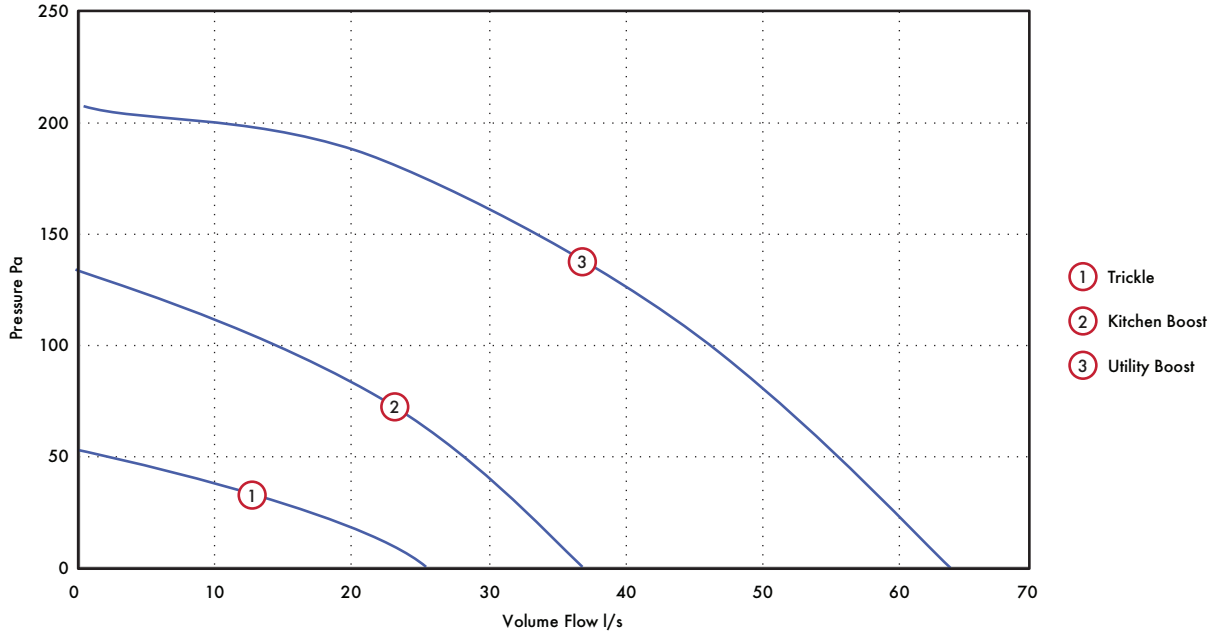

Performance @ 0 Pa

	High speed		Med speed		Low speed		Power (W)			Sound dB(A) @3m			SEC
Model	m^3/h	l/s	m^3/h	l/s	m^3/h	l/s	Kitchen	Utility	Trickle	Kitchen	Utility	Trickle	Class
Centrif Duo Plus P/T	220	61	130	36	-	-	60	41	N/A	51.8	38	N/A	D
Centrif Duo Plus DP/HTP	220	61	130	36	90	25	60	41	9	51.8	38	21.5	D

ACM 100-200

- Designed and manufactured in the UK
- Three speed motor
- Timer versions available
- Removable motor core
- Rotating motor chassis
- IP44 rated
- Aesthetically pleasing with wipe clean polymer casing
- Sound data from independent testing
- Running speed selected on installation

Ducted Ventilation

Vent-Axia has designed a complete range of energy efficient Mixed Flow In-Line fans that are now quieter, offer two and half times the pressure of conventional axial fans and are dimensionally more compact making them ideal for many ducted applications.

The ACM Mixed Flow In-Line fan can operate in both horizontal and vertical positions.

Motor

All motors have three speeds selectable on installation and are fitted with Standard Thermal Overload Protection (S.T.O.P.). Designed for ambient temperatures up to +50°C. All sizes with capacitor run motors. All sizes are Class II appliances. Supply voltage 220-240V/1/50Hz.

Installation

These units have a separate footplate for simple location mounting and detachable spigots for simple connection to ducting. The motor body chassis rotates to provide connection in acute spaces. Cleaning the product is simple as all parts can be removed without removing the ducting.

Controller

For optimum variable speed performance use a Vent-Axia 1.5 Amp electronic controller. Surface mounted providing variable speed control with an On/Off/sensor slider with indication light. There is an adjustable minimum speed setting. The controller has electrical connections for use with suitable external sensors. Cannot be used with timer models.

1.5 Amp Controller (Suitable for 100mm – 200mm models). Dimensions: 86 x 156 x 53mm (H x W x D).
Stock Ref
W300310

For flush fitting, a metal wall box accessory is available.
Stock Ref
400144

Hole for wall box: 80 x 150 x 150mm (H x W x D).

Models

Model	Stock Ref
ACM100	17104010
ACM100T	17104020
ACM125	17105010
ACM125T	17105020
ACM150	17106010
ACM150T	17106020
ACM200	17108010
ACM200T	17108020

Dimensions (mm)

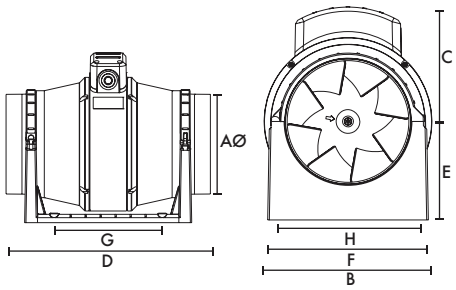

Size	100	125	150	200
AØ	97	122	147	199.5
B	178	178	200	223
C	124	124	138	146
D	298	259	350	300
E	96	96	118	130
F	168	168	192	195
G (fixing hole)	120	120	162	100
H (fixing hole)	153.5	153.5	178	180

Performance Guide

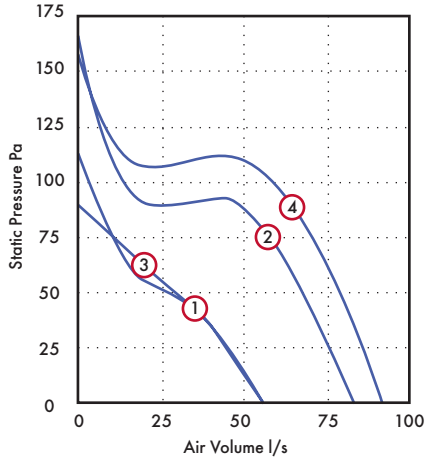

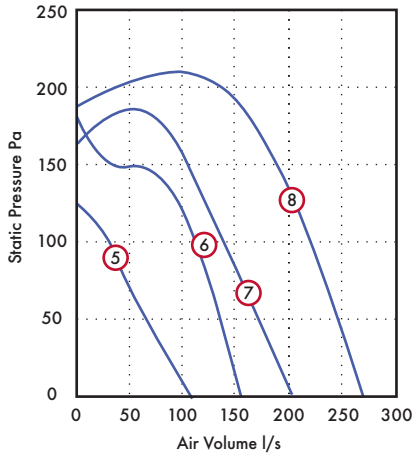

						l/s @ Pa							
Dia.	Motor Phase	Speed	r.p.m	IP Rating	Curve Ref.	0	50	100	150	200	Motor kW	F.L.C Amps	dB(A) @ 3m
100	1	Low	1580	IP44	1	55	28	-	-	-	0.02	0.09	16
100	1	High	2200	IP44	2	85	69	33	-	-	0.02	0.1	22
125	1	Low	1450	IP44	3	55	30	-	-	-	0.02	0.1	17
125	1	High	2400	IP44	4	92	79	60	-	-	0.03	0.12	24
150	1	Low	1645	IP44	5	105	65	31	-	-	0.04	0.17	29
150	1	High	2350	IP44	6	155	135	112	46	-	0.05	0.21	36
200	1	Low	1845	IP44	7	204	170	138	103	-	0.08	0.48	26
200	1	High	2350	IP44	8	270	247	220	188	134	0.11	0.55	41

*Medium speed is not shown.

Sound Data

Dia.	Spectrum	63	125	250	500	1k	2k	4k	8k	dB(A) @ 3m
100	Breakout High	32	36	41	39	37	37	28	22	22
100	Breakout Low	30	31	34	36	28	29	23	22	16
100	Inlet High	38	42	57	56	54	46	38	30	37
100	Inlet Low	35	40	49	49	47	37	28	24	30
100	Outlet High	36	41	52	52	53	44	37	28	34
100	Outlet Low	38	41	45	46	45	36	28	24	27
125	Breakout High	32	33	38	41	41	40	33	23	24
125	Breakout Low	27	33	30	39	30	29	24	22	17
125	Inlet High	36	47	53	58	55	53	47	39	39
125	Inlet Low	38	42	45	48	45	41	35	26	29
125	Outlet High	36	47	51	54	55	50	46	37	37
125	Outlet Low	33	41	45	45	44	38	33	25	26
150	Breakout High	26	28	41	45	48	54	41	29	36
150	Breakout Low	21	29	45	49	43	44	32	22	29
150	Inlet High	40	49	59	63	59	63	55	47	46
150	Inlet Low	38	46	52	57	52	54	46	37	38
150	Outlet High	36	48	54	60	58	61	54	46	44
150	Outlet Low	33	45	49	54	54	52	45	36	37
200	Breakout High	38	53	47	47	56	60	44	33	41
200	Breakout Low	26	46	40	34	30	26	18	21	26
200	Inlet High	46	52	54	60	61	63	60	49	47
200	Inlet Low	38	37	40	41	39	35	24	23	22
200	Outlet High	63	68	69	73	70	69	62	54	54
200	Outlet Low	53	54	52	52	48	47	39	28	33

ACM 250-315

- Available in two sizes
- Supplied complete for simple installation
- Optimise fan performance by using an approved Vent-Axia controller
- Diagonal impeller with stator
- Galvanized metal housing
- Integrated thermal switch
- Includes a mounting bracket
- Designed to meet IP54

Ducted Ventilation

Vent-Axia has designed a complete range of energy efficient Mixed Flow In-Line fans for use with rigid and flexible ducting.

In-line Mixed Flow fans offer two and half times the pressure of conventional axial fans and are dimensionally more compact making them ideal for many ducted applications.

The ACM Mixed Flow In-Line fan can operate in both horizontal and vertical positions and can be mounted to meet its optimum performance.

Motor

All motors are fitted with Standard Thermal Overload Protection (S.T.O.P.). Designed for ambient temperatures up to +50°C. All sizes with capacitor run motors. ACM 250 and 315 are Class I appliances. Supply voltage 220-240V/1/50Hz.

Models

Model	Stock Ref
ACM250	17110010
ACM315	17112010

ACM 250 Controller

For optimum performance use a Vent-Axia electronic controller. Surface mounted providing variable speed control with an On/Off/sensor slider with indication light. There is an adjustable minimum speed setting. The controller is radio suppressed to BS EN 55014 and electrical connections for use with suitable external sensors are provided.

1.5 Amp Controller – Suitable for 250mm model

Dimensions: 86 x 156 x 53mm (H x W x D).

Model	Stock Ref
1.5A Electronic Controller	W300310

ACM315 Controller

The electronic infinitely variable fan speed controller allow you to manually adjust the speed of single phase AC fans by varying the motor voltage through phase angle control. The integrated switch enables or disables the motor.

Supply voltage:	230 VAC / 50–60 Hz
Regulated output:	Umin–Us
Min. speed adjustment:	80–180 VAC
Unregulated output:	230VAC max 2.0A
Protection standard - Flush mounting:	IP44*
Protection standard - Surface mounting:	IP54*
Ambient conditions - Temperature:	0–40 °C
Ambient conditions - Rel. humidity:	5–95 % rH (non-condensing)
Maximum load - Rated max, current:	0.2 - 3.0A

*According to EN 60529

Model	Stock Ref
3A Transformer Controller	SC5030

Dimensions (mm)

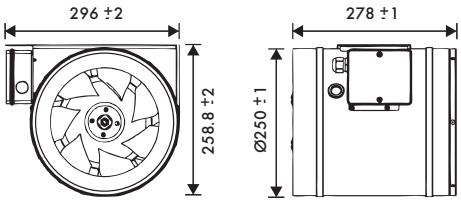

ACM250

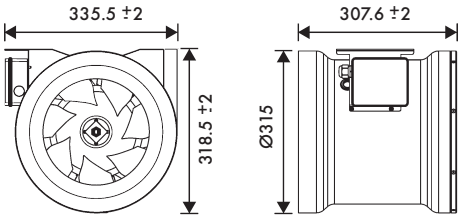

ACM315

Performance Guide

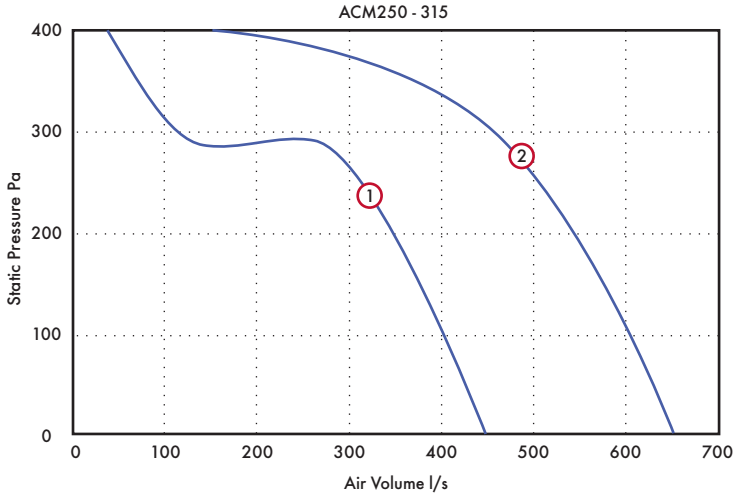

						l/s @ Pa								
Dia.	Stock Ref.	Poles	r.p.m	IP Rating	Curve Ref.	0	100	200	300	400	Motor kW	S.C. Amps	F.L.C Amps	dB(A) @ 3m
250	17110010	2	2720	IP54	1	450	410	350	120	40	0.14	0.8	1	53
315	17112010	2	2840	IP54	2	650	610	540	460	150	0.27	1.2	1.6	56

Sound Data

Dia.	Spectrum	125	250	500	1k	2k	4k	8k	dB(A) @ 3m
250	Inlet	34	54	61	65	67	66	55	72
250	Outlet	39	64	68	71	70	66	55	78
250	Breakout	34	41	43	46	46	42	37	54
315	Inlet	45	60	66	68	69	67	56	75
315	Outlet	47	69	73	74	72	66	57	79
315	Breakout	38	41	46	50	49	46	41	58

System 3 Lo-Carbon dMEV, MEV

housebuilder product awards 2014 winner

winner of housebuilder awards 2014

System 3. Continuous Mechanical Extract Ventilation can be achieved using a single centralised extract unit such as the Sentinel Multivent ducted from 'wet' rooms (kitchen, bathroom, en-suite and WC) or by decentralised individual fans (dMEV) in the 'wet' rooms. The fans run continuously at near silent levels providing a simple and effective form of ventilation.

The Lo-Carbon dMEV/SELV unit meets the latest requirements of the Building Regulations Approved Document F 2010 for wholehouse system ventilation.

Vent-Axia

Lo-Carbon NBR dMEV/dMEVe Unit 38 - 39

Lo-Carbon Centra®/SELV dMEV Unit 40 - 41

Lo-Carbon Quadra 42 - 43

Lo-Carbon Sentinel Multivent/Plus/CO_2 MEV Unit MEV Unit 44 - 47

Lo-Carbon MVDC-MS/MS-H Multivent MEV Unit 48 - 49

Lo-Carbon NBR dMEV/dMEVe

- Market leading efficiency
- Digital controls with display
- Fully adjustable trickle & boost airflow settings
- 100mm & 125mm model
- Recognised in SAP PCDB
- Constant volume
- Display showing airflow and system pressure
- Switched live connection for external switches/sensors
- IPX5 rated
- Multi–orientation grille
- NHBC Approved
- STAS Approved (Scotland)
- Airflow sensor models UKAS calibrated

H&V news AWARDS 2022 WINNER

Lo-Carbon NBR dMEV

Continuous running, constant volume dMEV range with switched live (LS) and innovative digital display and harmonised control platform. Quiet running and with high pressure development, the dMEV is best in class.

The unique patented display provides the calibrated installed airflow and pressure meaning that there is no need to test the installation with an airflow measuring device.

The constant volume technology automatically adjusts the speed of the fan to ensure the desired airflow is delivered. A silent high pressure axial impeller means Lo-Carbon dMEV can meet the requirements of many domestic installations without the need to use a traditional centrifugal fan.

A brand new control platform also provides fully adjustable airflow in 1l/s increments, meaning wholehouse rates can be achieved easily using fewer fans than is currently possible with any other dMEV product on the market.

Longer Duct Runs

A new 125mm dMEV fan is also available to further improve Dwelling Emission Rates (DER) by improving efficiency and lowering noise. The larger 125mm spigot also means there are almost no restrictions in terms of duct lengths and bends used in the system, when compared to a traditional 100mm axial fan. This means fewer fans are required to achieve wholehouse ventilation rates.

As can be seen below, an axial dMEV fan consumes a fraction of the energy of the equivalent centrifugal fan - drastically reducing DER.

Configuration	Location	Alternative Centrifugal Fan SFP	Vent-Axia dMEV 125mm SFP
In room	Kitchen	0.38	0.16
	Wet Room	0.29	0.20
Through Wall	Kitchen	0.36	0.12
	Wet Room	0.28	0.16

Side View of Airflow Display

Be confident that the dMEV is delivering the right performance with our innovative digital display showing the airflow and system pressure of the installed product.

Comfort Control Option

Designed to offer a more relaxing environment to the homeowner, the Lo-Carbon dMEV features a delayed start option. This patented comfort control option is selectable at installation and allows the homeowner to enjoy a quiet, peaceful bathroom for up to 20 minutes before the Boost activates. Furthermore, if the light switch turns On and Off within 3 minutes, the Boost will not activate. No more disturbing the family if the bathroom light is turned on during the night.

Model

Lo-Carbon NBR dMEVe & dMEVe HT

For kitchen, utility and bathroom/toilet applications, the continuous running H model incorporates an adjustable (40% - 90%) ambient response humidistat. The fan will increase the extract rate if the humidity rises above the point set at installation.

Fixed Speed Settings (3 boost speeds, 2 trickle speeds)

Model	Stock Ref
100e (Switch Live)	474496
100e HT (Humidity Control)	474497

Fixed Speed Settings (2 boost speeds, 3 trickle speeds)

Model	Stock Ref
125e (Switch Live)	495364
125e HT (Humidity Control)	495365

Lo-Carbon NBR dMEV & dMEV HT

Continuous running dMEV available in two sizes. Humidity control models incorporate an adjustable (40% - 90%) ambient response humidistat. The fan will increase the extract rate if the humidity rises above the point set at installation. Variable speed options for trickle and boost, dependant on size for maximum control. Features a display prism, to allow users to see airflow being achieved without having to remove a grille.

Variable Speed Settings (5-30 l/s trickle, 6-35 l/s boost)

Model	Stock Ref
100 (Switch Live)	475142
100 HT (Humidity Control)	473809

Variable Speed Settings (9-30 l/s trickle, 10-35 l/s boost)

Model	Stock Ref
125 (Switch Live)	494147
125 HT (Humidity Control)	494148

Accessories

Model	Stock Ref
Wall Kit White 100mm	254102
Wall Kit Brown 100mm	254100
Ceiling Kit 100mm	407928
Window Kit 100mm	407927
Decoration Frame 100mm	474041
Wall Kit White 125mm	455226
Conversion Kit 150mm	408680

Consultant Specification

The de-centralised mechanical extract ventilation unit shall be the NBR DMEV as manufactured by Vent-Axia, exact unit sizing and specification shall be in accordance with the particular specification.

The range should consist of IPX5 rated 100mm and 125mm sizes to meet the Building Regulations compliant design, extracting air from wet rooms (including kitchen and utility) via rigid, flexible ducting or through-wall applications with the fewest fans possible, supplied with a 7 year warranty.

The 100mm DMEV should have variable speed settings of 5-30 l/s on trickle and 6-35 l/s on boost, achieving a minimum noise level of 13 dB(A) at 3 metres. The 125mm DMEV should have variable speed settings of 9-30 l/s on trickle and 10-35 l/s on boost, achieving a minimum noise level of 12.9 dB(A) at 3 metres. All units shall be and independently 3rd party tested at the Sound Research Laboratory (SRL), tested to BS EN 13141-6.

The unit shall comprise a single high efficiency EC/DC motor to deliver specific fan powers as low as 0.12 w/l/s, as measured in accordance with the SAP PCDB test method and listed on the PCDB database.

The controls for the DMEV unit shall provide fully adjustable, continuous trickle and boost speeds, with the airflow being controlled in 1 l/s increments. The boost speed shall be activated via a switch live input or integral humidistat.

The unit shall include an integral humidity sensor with ambient and rapid response capability, which increases fan speed in proportion to the level of humidity detected. The unit shall also automatically raise the humidity threshold set point as temperature decreases in order to prevent unnecessary boosting due to background humidity levels.

The unit shall be able to be commissioned as a continuous running or intermittent fan according to the Building Regulations compliant design. The fan will have an in-built spirit level for ease of installation.

Commissioning of the fan in accordance with the Building regulations shall be achieved without the use of an airflow measuring device. The fan shall be provided with a UKAS calibrated, constant volume function with the flow rates displayed on the unit without having to remove the cover via the display prism.

Dimensions (mm)

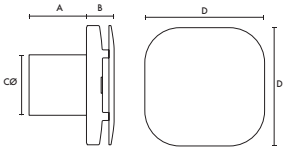

Model	A	B	CØ	D
100	81	43	99	190
125	100	46	115	213

Performance Guide

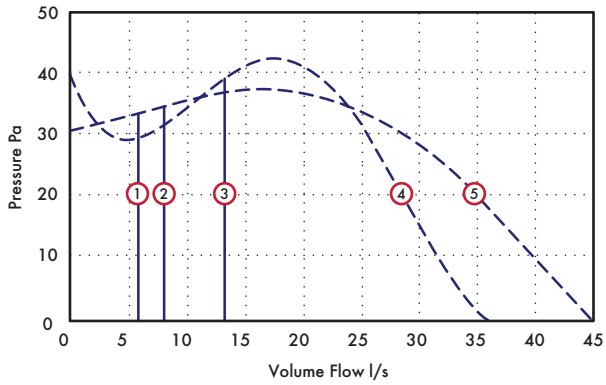

1. 6l/s Constant Volume
2. 8l/s Constant Volume
3. 13l/s Constant Volume
4. Maximum pressure available to deliver airflow - 100mm model
5. Maximum pressure available to deliver airflow - 125mm model

Sound

	100mm				
Flow l/s	Min	6	8	13	Max
Pa	-	5	7	17	-
dB(A)	13	14	17	24	41

	125mm				
Flow l/s	Min	9	13	15	Max
Pa	-	4	7	9	-
dB(A)	12	14	17	19	36

SAP PCDB Performance

Unit Configuration	Location	100 Model	125 Model
In room (rigid duct)	Kitchen	0.17	0.16
	Wet room	0.17	0.20
In room (flex-duct)	Kitchen	0.16	0.15
	Wet room	0.16	0.20
Through wall	Kitchen	0.12	0.12
	Wet room	0.14	0.16

Lo-Carbon Centra/SELV

- Building Regulations Approved Documents F and L compliant
- Continuous mechanical extract
- Recognised in SAP PCDB - Low SFP
- Discreet, tasteful styling
- IPX4 rated - IPX7 rated (SELV)
- dMEV Pressure detection device
- 5 year motor warranty
- Suitable for wall, ceiling, panel and window mounting
- SELV models supplied with remote transformer and suitable for 'Zone 1'

the ELECTRICAL industry awards WINNER 2011

Winners of the Energy Efficiency Initiative 2011 Award
with our Lo-Carbon Continuous Ventilation Product Range

What is de-centralised MEV (dMEV)?

Building Regulations Approved Document F gives examples of three main methods of ventilation. Continuous mechanical extract ventilation, can be achieved using a single centralised extract unit such as the Sentinel Multivent ducted to 'wet' rooms (kitchen, bathroom, en-suite and WC) or by decentralised individual fans, such as the Lo-Carbon Centra in the 'wet' rooms. The fans run continuously at near silent levels providing a simple and effective form of ventilation.

SELV (Safety Extra Low Voltage) is designed for areas where a fan can be installed within Zone 1 in a room where there is a fixed bath or shower. Ingress Protected (IP) to IPX7 Lo-Carbon Centra SELV can be fitted safely within the spray area. The separate transformer can be mounted away from the spray zone and out of reach from the bath or shower.

The Lo-Carbon Centra meets the latest requirements of the Building Regulations Approved Document F for wholehouse system ventilation and all models come with a 5 year motor warranty.

Selection of the two trickle flow rates (6l/s or 9l/s) is via a simple 'jumper' on the control board. Different methods are available for operating the 15 l/s boost speed from a simple switched live to integral humidistat. See individual models for further details.

The attractive and discreet styling of the Vent-Axia Lo-Carbon Centra will complement the décor of any new home while virtually silent operation ensures optimum ventilation is achieved without intrusive noise.

Specific Fan Power

dMEV version recognised in SAP PCDB. Lo-Carbon Centra has a specific fan power of only 0.18 W/l/s in through-the-wall kitchen applications.

Models

Lo-Carbon Centra dMEV

Auto speed selection at installation and suitable for bathrooms or kitchens. The integral air pressure sensor checks the airflow when first installed and also helps the fan to compensate for external wind pressure.

Stock Ref
441782

Lo-Carbon Centra T/SELV T (Timer)

Ideal for bathroom and toilet applications, this unit runs continuously on trickle setting and may be boosted by the switched live input which activates the timer (fixed 15 min on T models, adjustable 5-30 minutes on SELV models).

Model	Stock Ref
T	473825
SELV T	443175

Lo-Carbon Centra TP/SELV TP (Timer/Pullcord)

For bathroom/toilet applications, the continuous running TP model is boosted by the pullcord which activates the timer (fixed 15 min on TP models, adjustable 5-30 minutes on SELV models).

Model	Stock Ref
TP	473826
SELV TP	447128

Lo-Carbon Centra HT/SELV HT (Humidistat/Timer)

For bathroom/toilet applications, the continuous running HT model is automatically boosted by the built-in humidistat or by a switched live input which activates the timer (fixed 15 min on HP models, adjustable 5-30 minutes on SELV models).

Model	Stock Ref
HT	473827
SELV HT	443176

Lo-Carbon Centra HTP/SELV HTP (Humidistat/Timer/Pullcord)
For bathroom/toilet applications, the continuous running HTP model is automatically boosted by the built-in humidistat or by the pullcord which activates the timer (fixed 15 min on HTP models, adjustable 5-30 minutes on SELV models).

Model	Stock Ref
HTP	473828
SELV HTP	443177

Accessories

Model	Stock Ref
150mm Conversion Kit	443334
Wall Kit White	254102
Wall Kit Brown	254100
Window Kit	442947
Ceiling Kit	443800

Dimensions (mm)

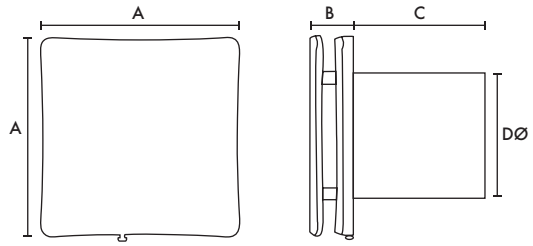

Model	A	B	C	DØ
Lo-Carbon Centra dMEV/All SELV	160	35	115	99
Lo-Carbon Centra T/TP/HT/HTP	160	35	115	99

Transformer 87 x 87 x 33mm (W x H x D) (SELV models only)

Performance Guide

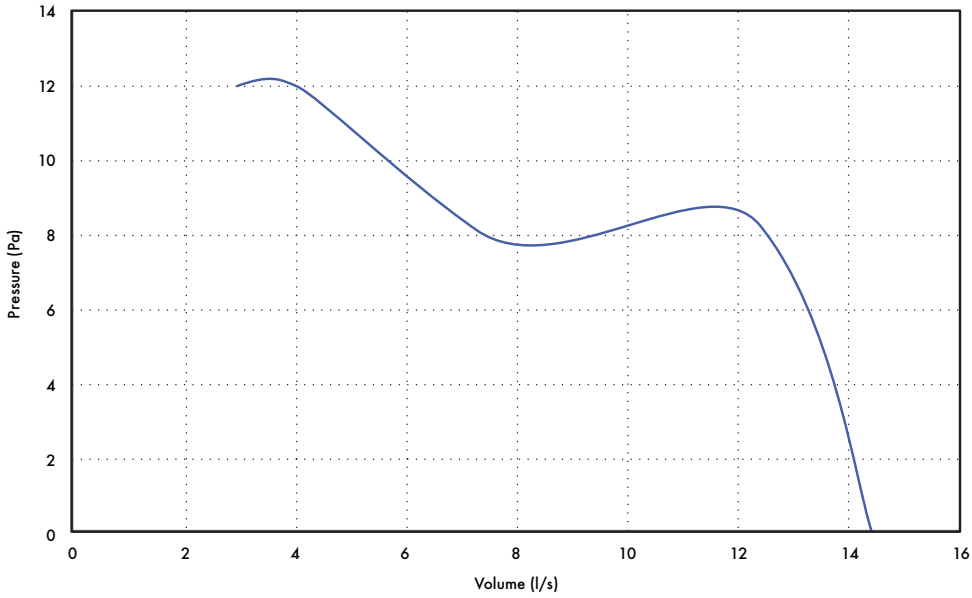

	Extract Performance (l/s)			Power Consumption (Watts)			Sound dB(A)@ 3m		
Model	Trickle Low	Trickle High	Boost	Trickle Low	Trickle High	Boost	Trickle Low	Trickle High	Boost
Lo-Carbon Centra dMEV/All SELV	6	9	15	1.4	1.6	2.4	10.8	15.5	25.2
Lo-Carbon Centra T/TP/HT/HTP	6	9	15	3.2	3.5	4.2	10.8	15.5	25.2

SAP PCDB Performance (dMEV model)

Systems With Rigid Ductwork Installation

Unit Configuration	Location	Fan Speed Setting	Flow Rate (l/s)	SFP (W/l/s)
In Room (Ducted)	Kitchen	High	13.2	0.32
In Room (Ducted)	Wet Room	9 l/s	8.4	0.28
Through Wall	Kitchen	High	13.5	0.18
Through Wall	Wet Room	9 l/s	8.6	0.20

Systems With Flexible Or Mixed Ductwork Installation

Unit Configuration	Location	Fan Speed Setting	Flow Rate (l/s)	SFP (W/l/s)
In Room (Ducted)	Kitchen	High	13.2	0.37
In Room (Ducted)	Wet Room	9 l/s	8.6	0.31
Through Wall	Kitchen	High	13.5	0.18
Through Wall	Wet Room	9 l/s	8.6	0.20

Lo-Carbon Quadra

- Meets current Building Regulations Approved Document F & L for intermittent or continuous use
- Recognised in SAP PCDB - Low SFP on PCDB 0.38 W/l/s
- 100mm circular spigot for easy installation and replacement of any existing fan - flush or surface mount
- Filterless technology and maintenance free
- Lo-Carbon motors offering 90% energy savings and long life
- Motor cassette cartridge for simple replacement
- 5 year Motor Warranty
- IPX4 rated
- Suitable for wall, ceiling and panel mounting

the ELECTRICAL industry awards WINNER 2011

Winners of the Energy Efficiency Initiative 2011 Award
with our Lo-Carbon Continuous Ventilation Product Range.

Ventilation for any room

The Lo-Carbon Quadra offers a single fan suitable for surface or flush mounting. Low speed selectable between 6, 9 and 12l/s and high between 15, 30 and 60l/s all with through the wall or two ducted selections to ensure installed performance is met.

Discrete

With discrete aesthetics and low noise levels due to an accurately balanced impeller, it is also one of the most unobtrusive centrifugal kitchen fans available. The front cover design also provides no area for dirt to build up so it stays looking better for longer.

Models

Lo-Carbon Quadra TP (Timer/Pullcord)

Dual speed: continuous running or intermittent to high speed. High speed via pullcord (On/Off) or switch live (with overrun timer).

Model	Stock Ref
TP	439251

Lo-Carbon Quadra HTP (Humidistat/Timer/Pullcord)

Dual speed: continuous running or intermittent to high speed. High speed via integral pullcord (On/Off), integral adjustable humidity sensor or switch live (with overrun timer). When humidity sensor is triggered the flow rate increases proportionally with %RH to 50% of the set Boost speed.

Model	Stock Ref
HTP	439181

Lo-Carbon Quadra TM (Timer/PIR)

Dual speed: continuous running or intermittent to high speed. High speed via integral PIR sensor or switch live (both with overrun timer).

Model	Stock Ref
TM	439253

Accessories

Model	Stock Ref
Flush Mounting Kit	439256
Filter (optional)	439927
Decoration Frame	442551
Wall Kit White	254102
Wall Kit Brown	254100

Dimensions (mm)

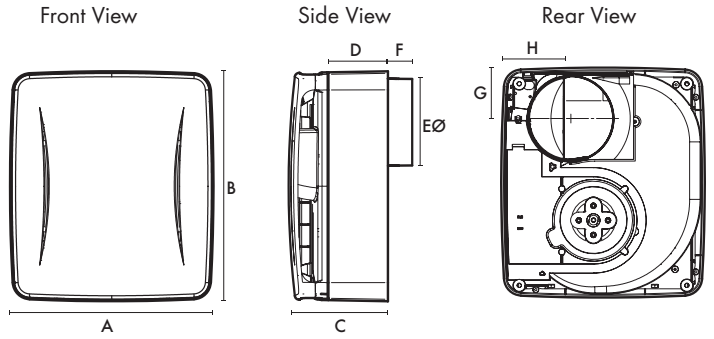

A	B	C	D	EØ	F	G	H
230	260	112	67	98	27	58	79

Performance Guide*

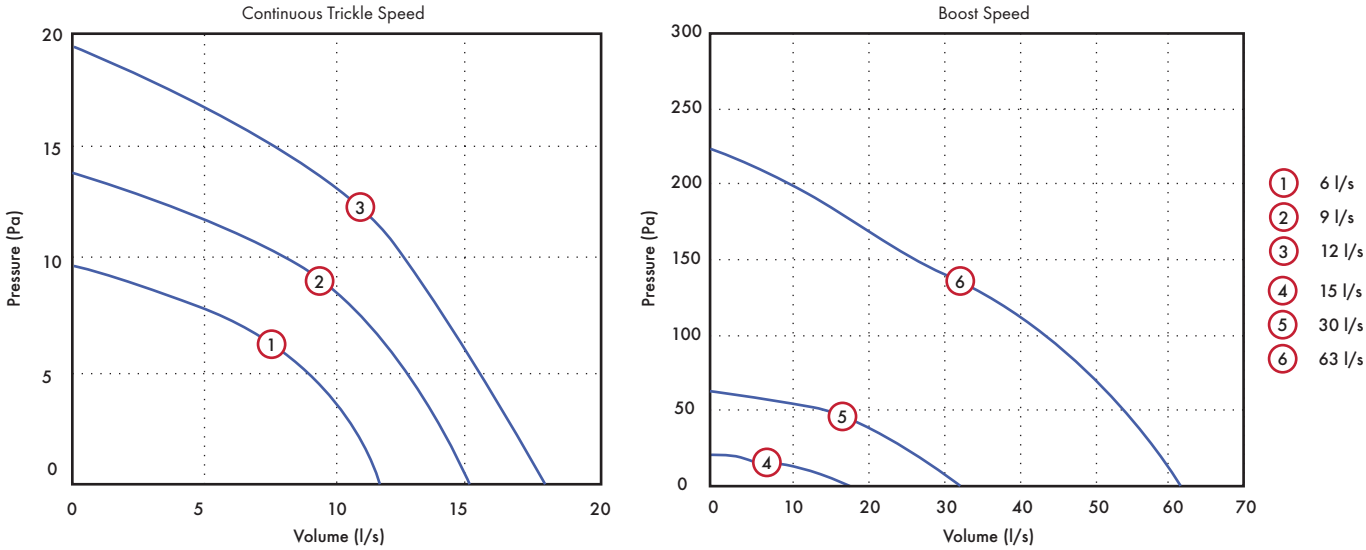

	Extract Performance				Power		Sound		
	High		Low		High	Low	dB(A) @ 3m		SEC
Model	m³/h	l/s	m³/h	l/s	Watts	Watts	High	Low	Class
Lo-Carbon Quadra TP/ HTP/ TM	227	63	22	6	38	3.8	50	20	D

*FID Performance. Tested in through the wall installation

SAP PCDB Performance

Systems With Rigid Ductwork Installation Only

Unit Configuration	Location	Fan Speed Setting	Flow Rate (l/s)	SFP (W/l/s)
In Room	Kitchen	15 l/s	15.8	0.41
In Room	Wet Room*	9 l/s	14.6	0.61
Through Wall	Kitchen	15 l/s	21.4	0.38
Through Wall	Wet Room*	9 l/s	19.5	0.50

Systems With Flexible Or Mixed Ductwork Installation Only

Unit Configuration	Location	Fan Speed Setting	Flow Rate (l/s)	SFP (W/l/s)
In Room	Kitchen	15 l/s	13.7	0.41
In Room	Wet Room*	9 l/s	12.9	0.63
Through Wall	Kitchen	15 l/s	21.4	0.38
Through Wall	Wet Room*	9 l/s	19.5	0.50

*Not suitable for Zone 1 installation

Lo-Carbon Sentinel Multivent/Plus

- Reduces your carbon footprint
- Recognised in SAP PCDB
- Specific fan power as low as 0.16 W/l/s
- Suitable for use with external sensors and controllers
- Wireless control option for "X" models
- Complies with Building Regulations ADF and ADL
- Manufactured in the UK

H&V news AWARDS 2022 WINNER

Sentinel Multivent continuous mechanical extract ventilation, MEV is designed for the simultaneous ventilation of separate areas in the home or as a multipoint extraction system for a wide range of commercial applications. The units can be wall, ceiling or loft mounted. Where the ambient air has a high humidity content condensate drains are provided.

In support of Sentinel Multivent, Vent-Axia offers:

- Practical advice on product selection and installation
- Guidance on solutions to meet legislation requirements
- Project management and site deliveries
- After sales support and maintenance information

The need to improve efficiency

Sentinel Multivent has been designed to meet the exacting demands of developers, installers and users offering advanced control options and easier installation and commissioning.

- Demand Control - enables precise ventilation rate, is set in 1% increments based on property size
- Comfort mode allows homeowners to control when the unit runs and for how long to avoid disturbance
- Integral digital display allows the installer to select appropriate low, normal, boost and purge speeds to meet demand
- Manual and automatic control options
- Integral adjustable overrun timer and delay on timer
- Switched live and SELV connections
- Optional Wireless Control on "X" units
- Energy efficient EC/DC motors - 1/3 less energy lost to heat than a conventional AC motor
- Low Specific Fan Power (SFP) making it one of the most efficient products on the market

Legislation

- Meets Building Regulations Approved Document F (System 3)
- Recognised in SAP PCDB up to kitchen + 6 wet rooms
- Meets carbon footprint reduction targets
- The need for better health: Removal of pollutants such as moisture, carbon dioxide and external fumes are all important factors in maintaining indoor air quality, helping to create a healthier living environment
- The integral humidity sensor (Sentinel Multivent H) increases fan speed in proportion to relative humidity levels, saving energy and reducing noise
- The sensor also reacts to small but rapid increases in humidity, even if the normal trigger threshold is not reached. This unique feature ensures adequate ventilation, even for the smallest wet room
- Night time relative humidity increment setback feature suppresses nuisance tripping as humidity gradually increases with falling temperature

SAP PCDB

In order to make the right choice, developers and contractors should refer to Building Regulations ADL1a, SAP 2012 and SAP PCDB.

SAP PCDB was launched in June 2006 to reward innovative ventilation manufacturers by testing and listing energy efficient products that assist in helping developers meet their Target Emission Rates (TER).

SAP is the underpinning methodology behind the Energy Performance Certificates and is used to demonstrate compliance with Building Regulations for Dwellings - Approved Document L (England and Wales), Section 6 (Scotland) and Approved Document F (Northern Ireland). SAP PCDB specifically relates to wholehouse ventilation systems and lists a number of Vent-Axia Mechanical Ventilation solutions which offer an improved SAP rating over and above the default for these product types.

SEC Class

Model	SEC Class (inc. LDC)
Sentinel Multivent/Plus	B

SAP PCDB Test Results (Sentinel Multivent and Multivent Plus)

Exhaust Terminal Configuration	Total Flow Rate (l/s)	SFP (W/l/s)
K+1	21	0.17
K+2	29	0.16
K+3	37	0.17
K+4	45	0.18
K+5	53	0.21
K+6	61	0.24

To assist developers and contractors Vent-Axia can provide detailed scheme designs together with installation guidance and training.

Your Carbon Footprint

Carbon footprint is a measure of the amount of carbon dioxide (CO^2) emitted through the burning of fossil fuels. From a residential and commercial building perspective, it is the amount of carbon generated when you consume a kiloWatt (kW) of electricity. Reducing a building's carbon footprint will ultimately reduce electricity bills and save money for every individual household or business. It will also help meet the UK target for the reduction of emissions, as well as allowing you to help the environment.

Model

	Stock Ref
Sentinel Multivent H	445655
Sentinel Multivent HX	495360
Sentinel Multivent HX CO^2	495361
Sentinel Multivent Plus H	407849
Sentinel Multivent Plus HX	495362
Sentinel Multivent Plus HX CO^2	495363

Accessories

	Stock Ref
Anti Vibration Mounts (Pack of 4)	68MP033G

See page D:10 for control options.

Dimensions (mm)

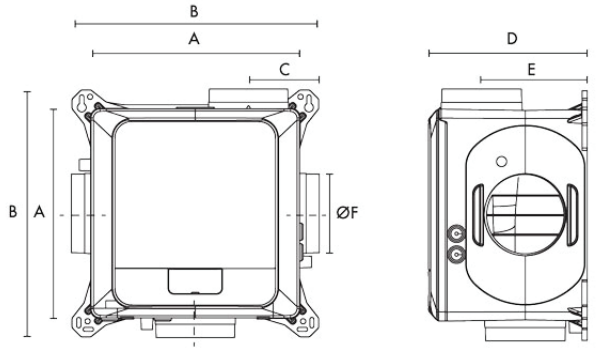

A	B	C	D	E	ØF
330	390	111	250	96	125

Performance Guide

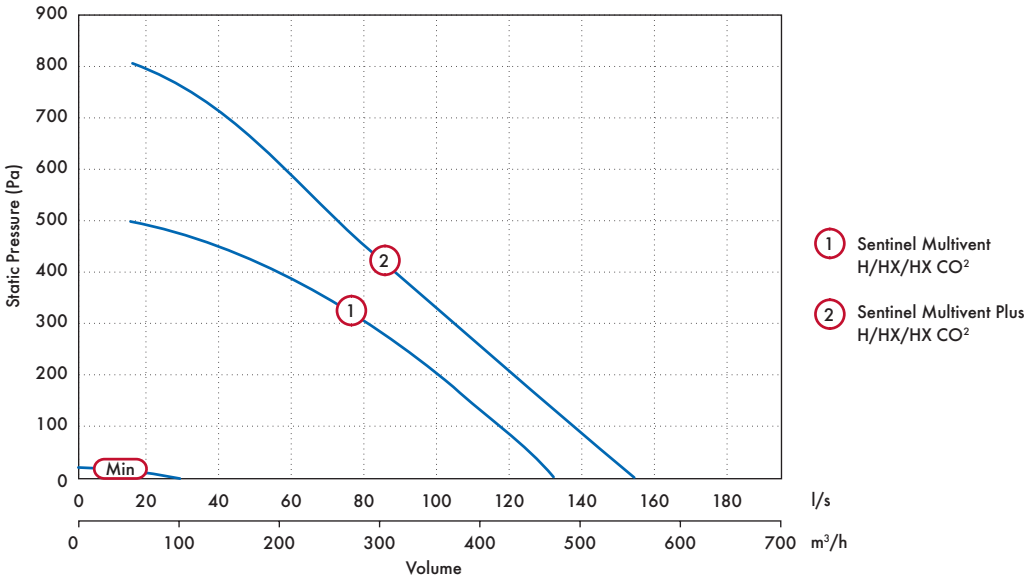

Stock Ref	Model	Curve Ref	FID (l/s)	Power Watts	IP Rating
445655 / 495360 / 495361	Multivent	1 (max)	128	52	IPX2
407849 / 495362 / 495363	Multivent Plus	2 (max)	159	85	IPX2

Sound Data

			Octave Band (Hz) Sound Power Levels, dB									
Model	Speed	Test Mode	63	125	250	500	1k	2k	4k	8k	LwA	SpL @ 3m
Sentinel Multivent	20%	Extract	32.5	50.7	41.9	37.5	28.4	19.4	17.8	22.3	38.0	20.5
		Breakout	28.7	37.6	32.5	29.6	20.9	14.8	17.9	22.7	30.5	10.0
	40%	Extract	33.4	51.3	52.7	48.2	41.8	38.0	24.0	22.8	49.2	31.7
		Breakout	34.1	52.7	42.6	38.9	30.3	24.8	18.5	22.6	42.0	21.5
	60%	Extract	38.2	53.3	70.5	58.9	49.5	46.0	35.8	27.2	61.5	44.0
		Breakout	44.8	48.4	54.4	45.4	37.6	32.6	23.6	22.8	47.4	26.9
	80%	Extract	41.7	55.5	70.3	60.6	55.3	52.7	43.5	35.9	64.2	46.7
		Breakout	41.8	51.6	61.9	50.9	43.5	39.5	30.3	23.9	55.1	34.6
	100%	Extract	46.3	58.1	75.1	66.7	60.1	58.0	49.1	43.3	70.2	52.7
		Breakout	46.0	54.0	63.2	55.3	47.8	44.6	35.7	27.0	58.3	37.8

Tested according to BS EN 13141-6:2010. Breakout quoted spherical. Extract quoted hemispherical.

			Octave Band (Hz) Sound Power Levels, dB									
Model	Speed	Test Mode	63	125	250	500	1k	2k	4k	8k	LwA	SpL @ 3m
Sentinel Multivent Plus	20%	Extract	30.3	49.6	43.5	40.4	33.2	25.2	18.2	22.4	40.3	22.8
		Breakout	30.5	39.8	35.3	31.3	22.3	16.5	17.9	22.8	32.5	12.0
	40%	Extract	43.5	54.7	60.8	54.5	46.2	42.5	31.0	24.5	54.5	37.0
		Breakout	47.0	49.3	54.0	42.1	33.9	29.1	20.6	22.6	45.7	25.2
	60%	Extract	40.8	55.2	67.0	61.0	54.0	50.9	41.3	33.3	62.1	44.6
		Breakout	40.1	51.2	58.7	48.2	41.3	37.4	28.4	23.5	52.0	31.5
	80%	Extract	45.5	57.6	79.1	66.3	59.7	57.5	48.5	42.7	73.2	55.7
		Breakout	45.6	54.6	64.5	54.7	46.5	44.2	35.2	26.5	59.1	38.6
	100%	Extract	52.7	61.8	71.6	81.8	66.1	62.7	54.0	49.2	77.8	60.3
		Breakout	56.0	56.6	61.2	63.1	51.3	49.0	40.4	31.4	60.9	40.4

Tested according to BS EN 13141-6:2010. Breakout quoted spherical. Extract quoted hemispherical.

Controllers and Sensors

Sentinel Multivent can be used with a wide range of Vent-Axia controllers and sensors. Ranging from integral humidistats, through to wireless controllers to wired remote sensors.

Ambient Response Humidity Sensor

- Pullcord override and indication light
- Changeover relay switch
- Operating range: 30% - 90%RH
- Ambient operating temp. 5°C to 40°C
- 220-240V AC
- Will fit single gang box for surface mounting

Stock Ref
563550

Ecotronic Humidity Sensor

- Set point adjustable
- Maximum switching load 1 Amp inductive
- Pullcord override indicator
- Ambient operating temp. 0°C to 40°C
- Supply voltage 220-240V

Stock Ref
563532

Visonex PIR Sensor

- Fits any UK single gang mounting box
- Adjustable timer overrun (5-25 mins)
- Range of detection up to 10 metres
- Designed to meet IP43
- Ambient operating temp. range 0°C to 50°C

Stock Ref
459623

Air Quality Sensor

- Ambient operating temp. 0°C to 50°C
- DEMKO approved
- Surface mounted
- 1 - 25 min O/R timer
- Supply voltage 220-240V

Stock Ref
563506

Lo-Carbon MVDC-MS/MSH Multivent

- Recognised in SAP PCDB with best in class Specific Fan Power
- Reduces your carbon footprint
- Fitted with three 125mm or nine 90mm diameter extract spigots allowing quick connection to ducts
- Complies with Building Regulations ADF
- Option of wall, ceiling and loft mounting
- Improved controllability
- Two Switched Live connections
- Fully variable normal, purge and boost speeds
- Ultra quiet
- Integral humidistat (H version)

H&V news AWARDS 2022 WINNER

With growing concerns about accurate ventilation of properties, the Lo-Carbon Multivent MVDC range offers the option of 'Close Control' both in the residential and the commercial sectors. With a DC motor the multi speed Lo-Carbon Multivent is one of the most efficient central extract units available.

The units have 3 fully variable speeds: normal, boost and purge. The digital display allows accurate setting of airflow, ensuring exactly the right ventilation rate. Accurate speed control helps minimise noise and energy consumption.

The Multivent H version incorporates a built-in humidity sensor to boost the unit when humidity reaches a certain threshold.

Models

Model	Stock Ref
MVDC-MS	437634
MVDC-MSH	443298
MVDC-MSH Uniflex	498502

SAP PCDB Test Results

Exhaust Terminal Configuration	Total Flow Rate (l/s)	SFP (W/l/s)
K + 1	21	0.15
K + 2	29	0.14
K + 3	37	0.16
K + 4	45	0.18
K + 5	53	0.21
K + 6	61	0.26

Dimensions (mm)

MVDC-MS/H

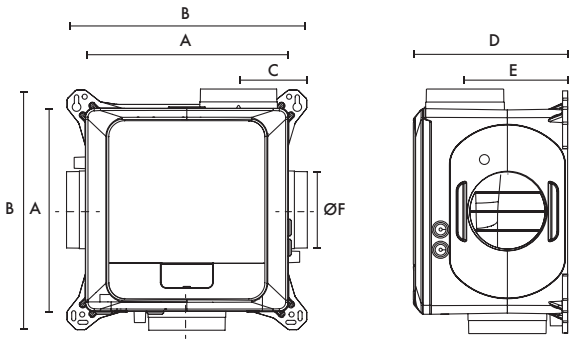

MVDC-MSH Uniflex

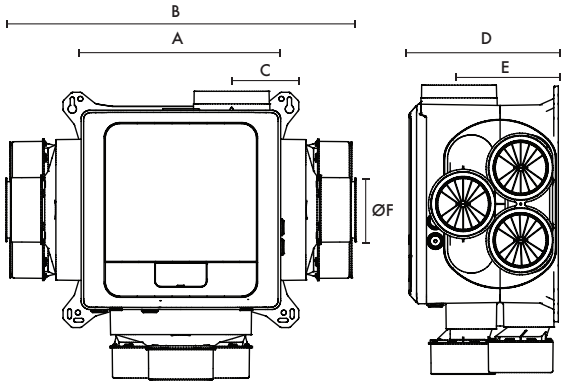

Model	A	B	C	D	E	ØF	G	kg	No. Extract Spigots
MVDC-MS/H	330	391	111	248	165	125	-	4.1	3
MVDC-MSH Uniflex	330	567	111	248	165	90	479	7	9

Performance Guide

MVDC-MSH features an integral humidistat which triggers the unit to boost when humidity levels in the duct system exceed 70%.

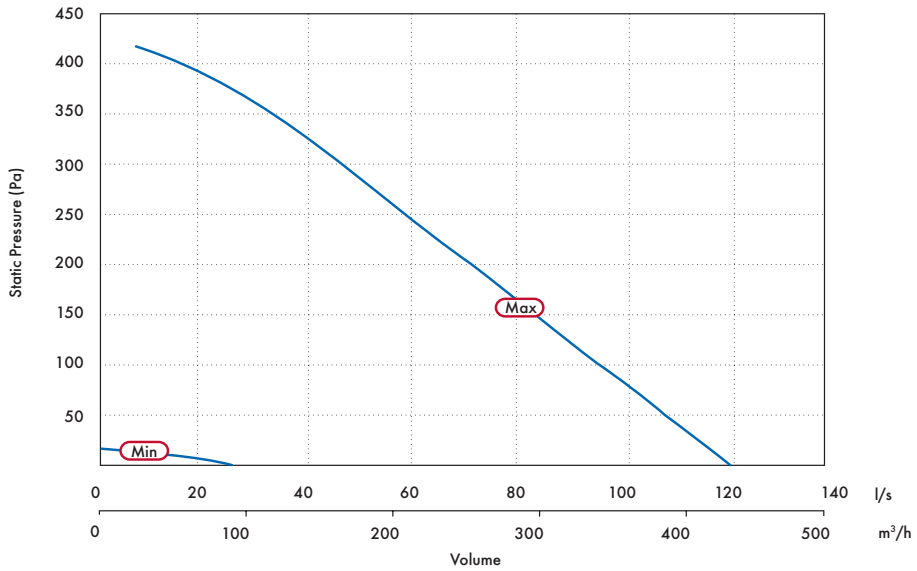

Min				Max				
Casing Breakout dB(A) @ 3m	Inlet Duct dB(A)	FID l/s	Power Watts	Casing Breakout dB(A) @ 3m	Inlet Duct dB(A)	FID l/s	Power Watts	SEC Class (inc. LDC)
13	18	24	2	37	40	118	44	B
13	18	24	2	37	40	118	44	B

Sound Data

		Octave Band (Hz) Sound Power Levels, dB									
Speed	Test Mode	63	125	250	500	1k	2k	4k	8k	LwA	SpL @ 3m
20%	Extract	50.3	40.4	40.0	33.7	28.1	21.6	18.0	23.0	36.2	18.7
	Breakout	40.2	38.7	32.8	26.9	17.1	14.5	17.8	22.4	29.9	9.4
40%	Extract	58.4	52.9	52.4	46.2	41.5	30.4	20.8	23.1	48.2	30.7
	Breakout	42.7	44.7	45.3	33.0	24.3	19.7	17.9	22.4	37.5	17.0
60%	Extract	56.4	58.2	62.5	53.9	41.3	40.0	32.0	25.9	56.2	38.7
	Breakout	40.1	52.1	50.2	39.2	30.6	32.2	20.0	22.4	43.9	23.4
80%	Extract	60.1	63.9	67.2	63.8	48.4	46.2	41.6	35.0	63.1	45.6
	Breakout	33.6	60.1	47.4	49.6	36.1	32.7	24.2	22.7	49.2	28.7
100%	Extract	76.2	79.3	71.9	69.7	53.6	51.4	47.9	42.2	69.7	52.2
	Breakout	47.3	56.6	52.5	52.7	40.7	37.7	29.7	23.7	51.7	31.2

System 4 MVHR for residential & commercial applications

Vent-Axia offers a complete range of Mechanical Ventilation with Heat Recovery (MVHR) units for residential and commercial applications, including many that are recognised in the SAP Product Characteristics Database.

Lo-Carbon Sentinel Kinetic® Advance
The first of our new generation of MVHR systems incorporating a range of unique features. Offering units with wifi and App control options along with integrated digital controls for easy installation the range is designed with developers, specifiers and installers in mind. With over 93% efficiency and low specific fan powers down to 0.38 W/l/s; designers will see a reduction in their dwelling emission rate.

Vent-Axia®

	Lo-Carbon Sentinel Kinetic® Range Overview	50 - 55
	Lo-Carbon Sentinel Kinetic® BH MVHR Unit	54 - 59
	Lo-Carbon Sentinel Kinetic® FH MVHR Unit	58 – 63
	NEW Lo-Carbon Sentinel Kinetic® Advance MVHR Unit	62 - 67
	Lo-Carbon Sentinel Kinetic® Plus MVHR Unit	66 - 71
	Lo-Carbon Sentinel Kinetic® High Flow MVHR Unit	70 - 73
	Lo-Carbon Sentinel Kinetic® Cooker Hood MVHR Unit	72 - 77
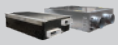	Lo-Carbon Sentinel Kinetic® Horizontal MVHR Unit	76 - 83
	Lo-Carbon Kinetic® Plus E MVHR Unit	82 - 85
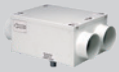	HR100R/RS Ducted MVHR Unit	88 – 89
	Integra Ducted MVHR Unit	90 - 91
	Integra Plus EC Ducted MVHR Unit	92 - 93
	Sentinel Totus2 D-ERV	94 - 99
	Remote System Hood	110

Sentinel Econiq S

Dimensions (mm)

Unit

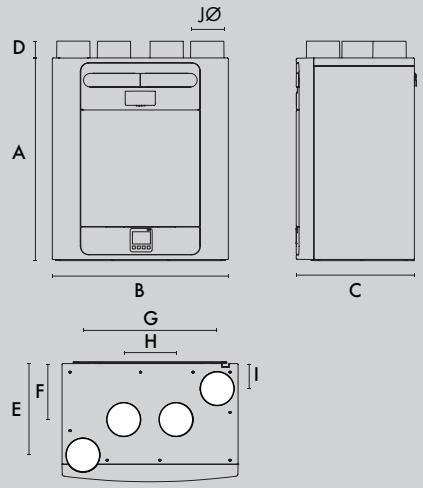

A	B	C	D	E	F	G	H	I	JØ	kg
760	660	443	63	343	210	503	197	93	125	27

Packed weight: 32kg

Acoustic Solution

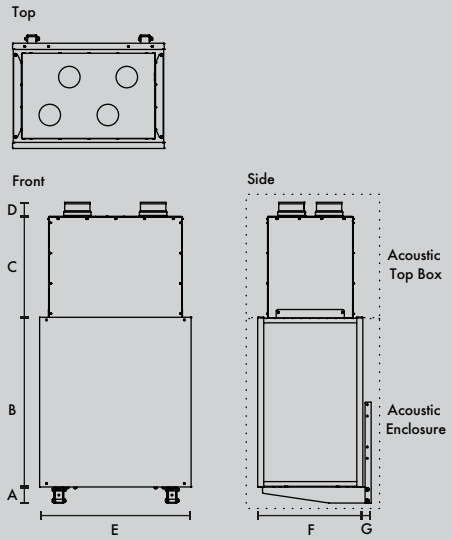

A	B	C	D	E	F	G	Acoustic Top Box kg	Acoustic Enclosure kg	Spigot
80	840	501	68	750	520	40	14	27	125

Sound Spectrum (Unit only)

Speed	Test mode	Octave Band (Hz) Sound Power Levels, dB 63	125	250	500	1k	2k	4k	8k	LwA	SPL dB(A) @ 3m
20%	Supply	52.9	50.9	46.8	43.0	34.6	27.1	19.2	25.4	43.9	26.4
	Extract	50.3	49.0	36.0	31.5	23.6	16.1	18.9	25.3	36.4	18.9
	Breakout	34.6	34.8	35.7	34.9	29.6	25.1	21.0	25.3	36.0	15.5
40%	Supply	59.5	56.5	59.4	55.0	48.2	42.6	31.8	26.1	55.9	38.4
	Extract	51.9	51.3	50.4	41.2	35.0	25.3	19.8	25.4	44.8	27.3
	Breakout	40.2	42.6	46.5	45.4	41.0	36.2	25.5	25.3	46.5	26.0
60%	Supply	66.9	62.4	63.3	62.0	57.9	53.5	43.4	34.2	63.2	45.7
	Extract	60.6	60.3	54.2	49.5	44.4	36.2	27.9	26.3	51.7	34.2
	Breakout	45.5	49.8	52.5	53.1	49.7	46.7	36.2	26.9	54.5	34.0
80%	Supply	82.4	67.6	65.2	67.6	64.2	60.8	50.8	43.2	69.2	51.7
	Extract	75.5	68.6	59.3	56.0	48.3	44.2	36.9	31.3	58.6	41.1
	Breakout	59.2	55.0	56.8	60.0	55.4	53.9	44.1	33.4	61.0	40.5
100%	Supply	79.4	69.6	66.6	75.1	64.9	63.6	53.4	45.7	73.7	56.2
	Extract	72.4	70.5	60.5	56.4	49.8	46.3	39.0	33.4	59.5	42.0
	Breakout	63.0	57.1	58.5	63.7	56.8	55.9	46.4	36.2	63.5	43.0

Sound Spectrum (Unit with Acoustic Solution)

Speed	Test mode	Octave Band (Hz) Sound Power Levels, dB 63	125	250	500	1k	2k	4k	8k	LwA	SPL dB(A) @ 3m
20%	Supply	54.7	50.5	41.5	30.8	18.6	14.7	18.2	24.0	38.0	20.5
	Extract	54.8	41.7	31.4	20.2	15.2	13.8	18.3	24.3	31.9	14.4
	Breakout	36.6	47.3	38.0	24.7	19.3	16.6	19.1	23.6	34.0	13.5
40%	Supply	61.0	57.7	56.0	39.0	27.5	16.6	18.4	24.1	48.9	31.4
	Extract	55.7	50.8	44.6	26.8	19.1	15.0	18.2	24.0	39.2	21.7
	Breakout	55.9	55.2	48.2	35.5	29.9	20.9	20.4	25.3	42.6	22.1
60%	Supply	64.5	64.3	56.2	48.6	36.0	22.8	19.0	24.2	52.3	34.8
	Extract	59.4	57.3	46.6	36.0	25.6	17.4	18.6	24.5	43.9	26.4
	Breakout	43.5	60.5	49.5	43.5	39.0	32.0	23.8	23.7	47.6	27.1
80%	Supply	68.9	65.9	59.9	53.9	41.4	29.3	21.6	24.7	55.9	38.4
	Extract	63.1	69.3	52.6	43.0	33.4	23.7	20.2	24.6	54.5	37.0
	Breakout	48.3	69.8	52.7	48.3	44.7	39.8	33.2	25.9	57.1	36.6
100%	Supply	72.5	70.5	63.1	56.1	43.9	33.0	23.7	25.2	59.3	41.8
	Extract	70.3	61.9	56.2	45.4	36.6	28.0	22.9	24.6	51.5	34.0
	Breakout	54.3	67.1	63.3	51.3	47.9	43.9	38.5	28.7	57.7	37.2

Tested according to BS EN 13141-7:2010. Breakout quoted spherical. Supply and Extract quoted hemispherical. For in-duct data, end reflections are added based on the spigot size of the unit.

Performance

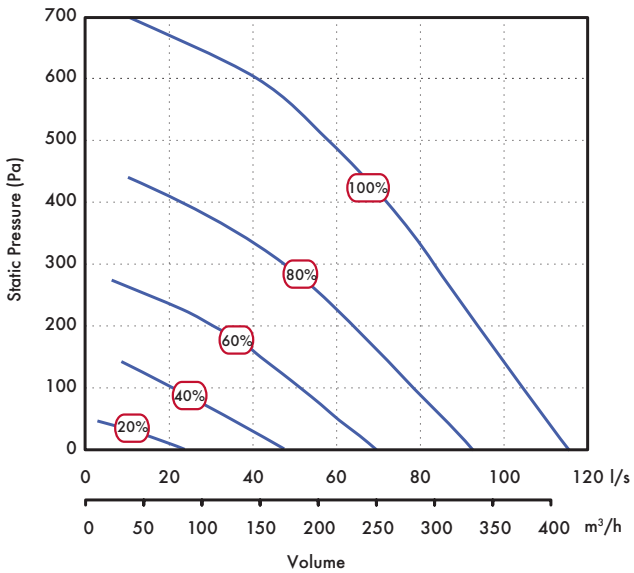

Spigot Configuration

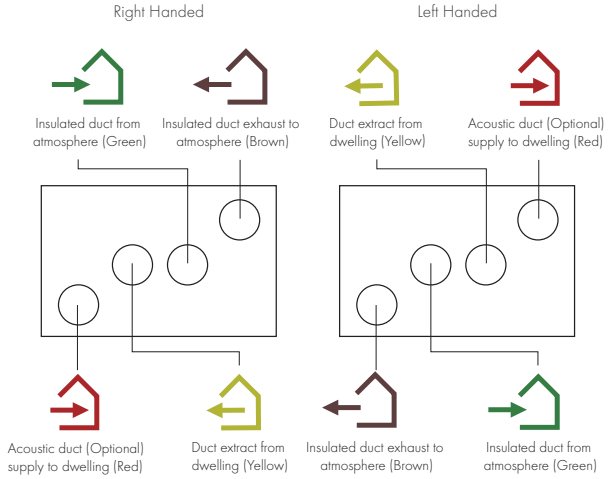

Hand-able through controller (except if pre-heater fitted)

Sentinel Econiq M & L

Dimensions (mm) (Sentinel Econiq M & L)

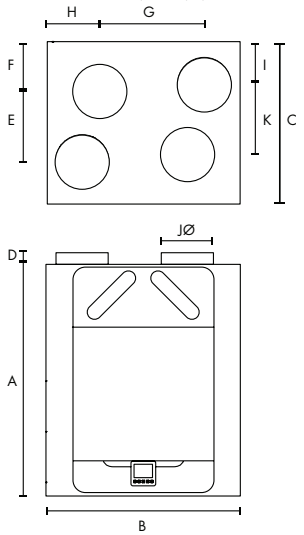

A	B	C	D	E	F	G	H	I	JØ	K	kg
881	728	608	50	261	187	394	200	160	200	261	50

Packed weight: 55kg

Sound Spectrum (Sentinel Econiq M)

Speed	Test mode	Octave Band (Hz) Sound Power Levels, dB 63	125	250	500	1k	2k	4k	8k	SPL dB(A) @ 3m
20%	Breakout	32	41	35	31	24	17	19	23	12
	Inlet	48	42	33	23	19	14	17	22	13
	Outlet	55	55	48	41	34	23	18	22	27
40%	Breakout	36	45	46	42	36	25	19	23	22
	Inlet	54	45	43	33	31	20	18	22	21
	Outlet	64	58	57	52	49	40	26	22	37
60%	Breakout	43	50	51	48	44	36	22	23	29
	Inlet	59	51	51	39	39	29	20	22	28
	Outlet	69	64	65	58	58	51	38	26	45
80%	Breakout	48	55	56	53	50	43	30	24	34
	Inlet	65	56	57	46	44	37	26	22	34
	Outlet	73	68	67	64	63	59	47	35	50
100%	Breakout	60	60	57	58	55	47	36	29	38
	Inlet	69	59	54	48	48	41	31	24	35
	Outlet	76	70	67	69	66	63	53	42	53

Performance (Sentinel Econiq M)

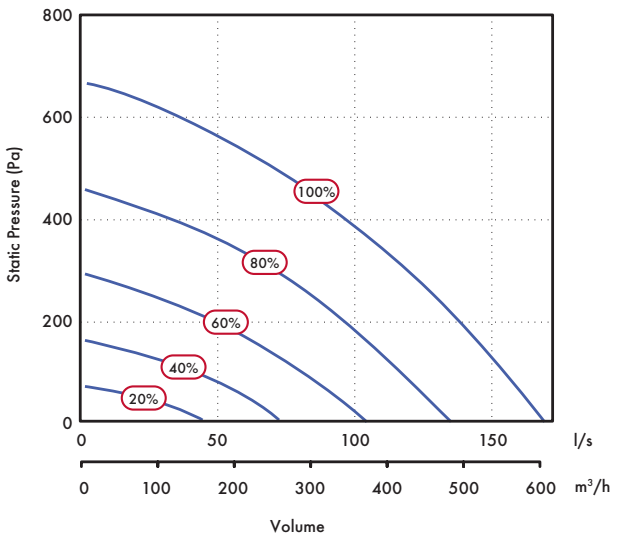

Spigot Configuration (Sentinel Econiq M & L)

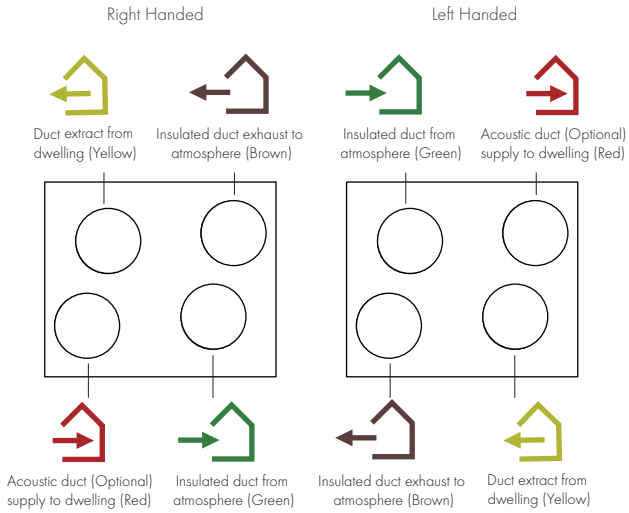

Sound Spectrum (Sentinel Econiq L)

Speed	Test mode	Octave Band (Hz) Sound Power Levels, dB 63	125	250	500	1k	2k	4k	8k	SPL dB(A) @ 3m
20%	Breakout	41	41	51	47	40	18	19	23	26
	Inlet	50	43	42	38	31	16	18	23	21
	Outlet	57	56	53	47	40	29	19	24	31
40%	Breakout	41	44	53	52	43	32	20	23	31
	Inlet	60	48	50	38	37	26	19	23	27
	Outlet	68	62	62	56	55	49	33	24	42
60%	Breakout	44	50	55	56	48	42	27	23	34
	Inlet	63	54	59	44	43	37	24	23	35
	Outlet	71	67	67	62	62	59	46	34	49
80%	Breakout	55	54	54	60	52	47	36	24	38
	Inlet	69	60	55	50	48	43	33	24	36
	Outlet	78	72	66	70	67	65	56	44	54
100%	Breakout	67	67	58	72	58	50	42	27	50
	Inlet	81	64	58	57	51	47	39	27	42
	Outlet	91	76	69	74	70	69	62	50	58

Performance (Sentinel Econiq L)

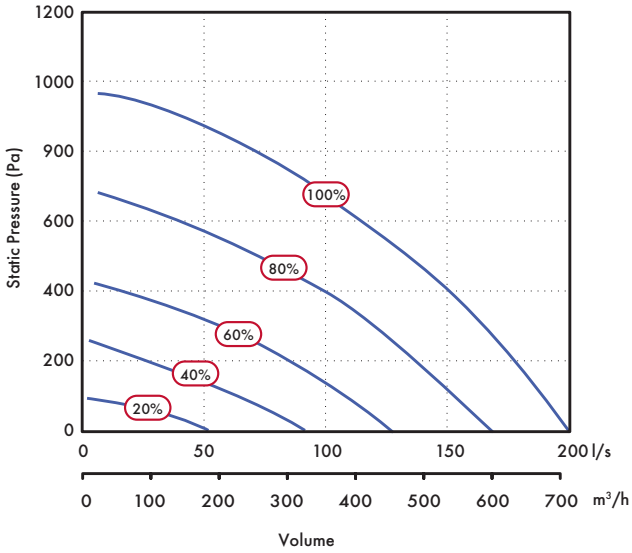

Sentinel-X Controller

HMI Kit

Wall-mounted HMI Kit to suit Econiq models with full HMI
Includes HMI Blank controller, HMI backplate and cable.

- Dimensions (H x W x D) (mm) 90 x 90 x 17
- 240V local power supply required
- Wireless range 20m closed/100m open
- RF 868MHz Wireless or RS485 Wired communication
- Compatible with standard single gang or surface mounted pattress box

Stock Ref
411628

0-10V Sensors

0-10V – Internal Temperature and Humidity - Wired
A sensor that measures the Internal temperature and relative humidity levels within the room and communicates to the compatible system, using the 0-10V output.

- Dimensions (H x W x D) (mm) 90 x 90 x 17
- 24V Power supply required
- Temperature range 0~60°C
- Relative humidity range 0-90% RH
- Compatible with standard single gang or surface mounted pattress box
- Status LED indicator for pairing, health check, faults & air quality traffic light index
- 0-10V Wired Communication

Stock Ref
496428

0-10V $C0_2$, Temperature and Humidity - Wired
Room mounted CO_2 sensor with 0-10V signal output powered by an external 24V supply.

- Dimensions (H x W x D) (mm) 90 x 90 x 17
- 24V Power supply required
- Temperature range 0~60°C
- Relative humidity range 0-90% RH
- CO_2 range 0-2000PPM
- Compatible with standard single gang or surface mounted pattress box
- Status LED indicator for pairing, health check, faults & air quality traffic light index
- 0-10V Wired Communication

Stock Ref
496432

Battery Controllers & Sensors

Battery - Internal Temperature and Humidity - Wireless
Room mounted humidity and temperature sensor for wired or wireless communication with a compatible system. Using an in-built RF 868 MHz (Wireless radio frequency), or RS485 (Wired connection) communication method whilst being powered by batteries.

- Dimensions (H x W x D) (mm) 60 x 60 x 22
- 2 x AAA Batteries
- Temperature range 0~60°C
- Relative humidity range 0-90% RH
- Wireless range 20m closed/100m open
- RF 868MHz Wireless or RS485 Wired communication
- Status LED indicator for pairing, health check and fault conditions
- Mounted using provided back plate

Stock Ref
496431

Battery - External Temperature and Humidity - Wireless
Externally mounted humidity and temperature sensor for wired or wireless communication with a compatible system. Using an in-built RF 868 MHz (Wireless radio frequency), or RS485 (Wired connection) communication method whilst being powered by batteries.

- Dimensions (H x W x D) (mm) 116 x 114 x 40
- 2 x AAA Batteries
- Temperature range -30~60°C
- Relative humidity range 0-90% RH
- Wireless range 20m closed/100m open
- RF 868MHz Wireless or RS485 Wired communication
- IP Rating - IP67
- Status LED indicator for pairing, health check and fault conditions

Stock Ref
496442

Battery – 4 Speed Switch with Temperature and Humidity - Wireless
Room mounted Speed Switch for wireless communication with a compatible system. Using an in-built RF 868 MHz (Wireless radio frequency) communication whilst being powered by batteries.

- Dimensions (H x W x D) (mm) 90 x 90 x 17
- 2 x AAA Batteries
- Temperature range 0~60°C
- Relative humidity range 0-90% RH
- Wireless range 20m closed/100m open
- RF 868MHz Wireless
- Mounted using provided back plate or compatible with a standard single gang or surface mounted pattress box
- Status LED indicator for pairing, health check and fault conditions

Model	Stock Ref
White	496437

Sentinel-X Controller

240V Controllers & Sensors

240V - Internal Temperature and Humidity - Wireless
Room mounted humidity and temperature sensor for wired or wireless communication with a compatible system. Using an in-built RF 868 MHz (Wireless radio frequency), or RS485 (Wired connection) communication method whilst being powered by a local 240V supply.

- Dimensions (H x W x D) (mm) 90 x 90 x 17
- Power supply 240V
- Temperature range 0~60°C
- Relative humidity range 0-90% RH
- Wireless range 20m closed/100m open
- RF 868MHz Wireless or RS485 Wired communication
- Compatible with standard single gang or surface mounted pattress box
- Status LED indicator for pairing, health check, faults & air quality traffic light index

Stock Ref
496429

240V - CO_2, Temperature and Humidity - Wireless
Room mounted CO_2 sensor for wired or wireless communication with a compatible system. Using an in-built RF 868 MHz (Wireless radio frequency), or RS485 (Wired connection) communication method whilst being powered by a local 240V supply.

- Dimensions (H x W x D) (mm) 90 x 90 x 17
- Power supply 240V
- Temperature range 0~60°C
- Relative humidity range 0-90% RH
- CO2 Range 0-2000 PPM
- Wireless range 20m closed/100m open
- RF 868MHz Wireless or RS485 Wired communication
- Compatible with standard single gang or surface mounted pattress box
- Status LED indicator for pairing, health check, faults & air quality traffic light index

Stock Ref
496433

240V - PIR Sensor - Wireless
Room mounted PIR sensor for wired or wireless communication with a compatible system. Using an in-built RF 868 MHz (Wireless radio frequency), or RS485 (Wired connection) communication method whilst being powered by a local 240V supply. Room mounted presence detector for min/max or on/off control. Wall or ceiling mounting.

- Dimensions (H x W x D) (mm) 90 x 90 x 17
- Power supply 240V
- 5-25min run on timer
- PIR Range 3m
- Compatible with standard single gang or surface mounted pattress box
- Wireless range 20m closed/100m open
- RF 868MHz Wireless or RS485 Wired communication

Stock Ref
496438

240V - AIM Alarm Interface Module including Temperature and Humidity - Wireless
Room mounted AIM for wired or wireless communication with a compatible system. Using an in-built RF 868 MHz (Wireless radio frequency), or RS485 (Wired connection) communication method whilst being powered by a local 240V supply.

- Dimensions (H x W x D) (mm) 90 x 90 x 17
- Power supply 240V
- Temperature range 0~60°C
- Relative humidity range 0-90% RH
- Wireless range 20m closed/100m open
- RF 868MHz Wireless or RS485 Wired communication
- Compatible with standard single gang or surface mounted pattress box
- Status LED indicator for pairing, health check and fault conditions

Stock Ref
496441

240V - 4 Speed Switch with Temperature and Humidity - Wireless

Room mounted Speed Switch for wireless communication with a compatible system. Using an in-built RF 868 MHz (Wireless radio frequency) communication whilst being powered by a local 240V supply.

- Dimensions (H x W x D) (mm) 90 x 90 x 17
- Power Supply 240V
- Temperature range 0~60°C
- Relative humidity range 0-90% RH
- Wireless range 20m closed/100m open
- RF 868MHz Wireless
- Mounted using provided back plate or compatible with standard single gang or surface mounted pattress box
- Status LED indicator for pairing, health check and fault conditions

Model	Stock Ref
White	496620

240V - 4 Speed Switch with Temperature and Humidity - Wired

Room mounted Speed Switch for wired communication with a compatible system. Using an in-built RS485 communication method powered by a local 240V supply.

- Dimensions (H x W x D) (mm) 90 x 90 x 17
- Power Supply 240V
- Temperature range 0~60°C
- Relative humidity range 0-90% RH
- Mounted using provided back plate or compatible with standard single gang or surface mounted pattress box
- Status LED indicator for pairing, health check and fault conditions
- RS485 Wired Connection

Model	Stock Ref
White	496621

Lo-Carbon Sentinel Kinetic Range Overview

- Manufactured in the UK
- Building Regulations ADF and ADL compliant
- Recognised in SAP PCDB
- Specific Fan Power down to 0.4 W/l/s
- Up to 94% heat recovery
- Fully automatic Summer bypass
- Horizontal and/or vertical duct outlets
- Integrated digital controller for simple and accurate commissioning
- Lightweight for easy installation
- External condensate connection
- Plug and play controls; Humidistat
- Acoustic Enclosure option for reduced breakout noise
- Acoustic Top Box option for reduced in-duct noise

The Sentinel Kinetic Range Incorporates:

- A wholehouse heat recovery system with up to 94% energy efficiency
- An easily accessible heat recovery cell protected by two removable ISO 45% Coarse (G3) filters
- Two Lo-Carbon energy saving EC/DC fans which ensure long life (typically over double the life of AC motors) and lowest possible energy use
- Fully insulated construction with built-in condensation drain
- Specifically designed for new build constructions with a high level of insulation

The Lo-Carbon Sentinel Kinetic meets the latest requirements of the Building Regulations ADF and ADL for wholehouse system ventilation: Continuous mechanical supply and extract with heat recovery. The Lo-Carbon Sentinel Kinetic models have 3 fully adjustable speeds and a purge setting (maximum flow). Provided with the unit is a digital controller that can be used to preset the speeds to any required airflow within the performance range.

Integral Humidity Sensor

The integral humidity sensor (models with H suffix) increases speed in proportion to relative humidity levels, saving energy and reducing noise. The sensor also reacts to small but rapid increases in humidity, even if the normal trigger threshold is not reached. This unique feature ensures adequate ventilation, even for the smallest wet room. The night time relative humidity setback feature suppresses nuisance tripping as humidity gradually increases with falling temperature.

Acoustic Solution

For scenarios where noise is a critical issue, The Sentinel Kinetic Acoustic Solution is also available for all Sentinel Kinetic units. An Acoustic Enclosure will reduce breakout noise and the Acoustic Top Box will reduce in-duct noise at key frequencies. The acoustic solution sound data for each product can be found on the relevant product page.

Filtration

A new ISO filtration standard has come into force. The test method has changed so direct comparisons between EN779 2012 and ISO 16890 cannot be drawn. Below is a guide to the filter efficiencies:

ISO 16890	EN779
45% Coarse	G3
65% Coarse	G4
ePM10 50%	M5
ePM2.5 70%	F7

For sensors see Accessories & Controllers section.

Sentinel Control

The Sentinel controller is the most advanced system available, providing Demand Control Ventilation (DCV), minimising energy consumption and noise levels, and optimising ventilation performance. Sentinel controlled units may be set to operate fully automatically or with varying levels of manual intervention.

Building Management System (BMS) Options

There are two levels of BMS available: Basic Output and full Electronic BMS.

Basic Output provides a 5 volt output from the LED terminals on the controller. This output occurs whenever a message appears in the digital display, for example; 'Check Filters' or a fault code. The output can also be converted to volt-free with the addition of an optional Opto-Coupler.

Electronic BMS: A full range of two-way digital signals are available through the RJ11 connector on the control board. The BMS system provider will translate this signal to extract the desired data. Contact Vent-Axia to discuss your specific requirements.

LED Alarm

MVHR units are often installed in lofts or other locations where they are difficult to monitor. The optional remote LED alarm illuminates when any message is visible in the MVHR unit display panel. The LED alarm can be installed in a convenient location within the dwelling allowing end users to see that the unit requires attention.

Control Inputs

Five volt-free pairs of switch terminals for sensor inputs allow boosting from a full range of Vent-Axia controllers – humidistats, PIR, timers.

Two terminals with 0-24V outputs allow 0V to 10V proportional control by sophisticated controllers such as CO_2 sensors and proportional humidistats.

Switched-live for boosting via light switches (220-240V AC) or manual Normal/Boost switches. This connection has the advantage of Delay-On and Delay-Off facility. Delay-On enables you to prevent the Boost airflow between 0 and 10 minutes, after a light switch has been activated. Delay-Off allows the Boost airflow to continue after a light switch is turned off to ensure effective clearance of humidity. This timer is adjustable between 0 and 25 minutes.

The units can be boosted incrementally via the on-board controller or the Wired Remote Controller: One press = 30 minutes, two presses = 60 minutes, three presses = continuous.

Frost Protection

In order to prevent frost forming inside the unit in winter conditions, the Kinetic range employs a sophisticated frost protection strategy that modifies the airflows ensuring heat recovery continues down to -20°C. Below this temperature, the units will operate as 'extract only' fans. If balanced ventilation is required at low temperatures, a duct pre-heater should be used.

Optional Controls

Model	Stock Ref
LED Alarm with 15 metre cable	448356
Wired Remote Controller with 15 metre cable	443283

Purge Options

The unit can be set to maximum flow (100%) by pressing and holding the Boost button on the unit itself or optional wired controller for 5 seconds. Purge will continue for two hours unless cancelled by pressing the Boost button again.

In addition, the Acoustic Purge Fan can be used in conjunction with a Sentinel Kinetic MVHR unit or independently via a separate switched live connection or 0-10V external sensor input.

Model	Stock ref
Acoustic Purge Fan	477988
Acoustic Purge Fan XL	479829

Summer Bypass

An internal damper operates when the external temperature is below the internal temperature, and the internal temperature is too high.

The bypass opens and allows the cooler outside air to help cool the dwelling.

Normal mode: Fans run on Normal speed with bypass open until the internal dwelling temperature falls below the set 'Indoor' (maximum desired) temperature.

Evening Purge mode: The fans run on Boost speed until the internal temperature falls below the set 'Indoor' temperature. If, after five hours the internal temperature is still above the set 'Indoor' temperature, the unit will switch down to normal speed for the remainder of the 'bypass open' period.

Night-time Purge mode: As Evening Purge, except that the unit will continue on Boost speed until the internal air temperature reaches the 'Outdoor' temperature set point (Default 14°C). This mode gives pre-cooling of the dwelling for the following day.

In Evening and Night Time Purge modes, the user can turn off the boost function by pressing the Boost button.

A Summer Bypass can make a contribution to reducing internal temperatures but is not a substitute for appropriate design and construction.

System Cooker Hood Range

System canopy hoods are a motorless hood with extract being provided by the MVHR unit. When the Boost button on the canopy is activated, the MVHR unit goes to boost setting and the summer bypass opens preventing cooking by-products entering the heat exchanger cell. SELV hoods allow the distance between the hood and an electric hob to be reduced from 650mm to 550mm.

Model	Stock ref
White	407509
Aluminium	407206
White SELV	474790
Aluminium SELV	474791

Model Range Overview

	Sentinel Kinetic Range					Kinetic E Range
Model Ranges	Lo-Carbon Sentinel Kinetic	Lo-Carbon Sentinel Kinetic FH	Lo-Carbon Sentinel Kinetic Plus	Lo-Carbon Sentinel Kinetic High Flow	Lo-Carbon Sentinel Kinetic Cooker Hood	Lo-Carbon Kinetic Plus E
Models	BH	FH	Plus	High Flow	CH	Plus E
Acoustic Enclosure	O	O	O	O		O
Acoustic Top Box	O	O	O	O		O
Auto Summer Bypass	✓	✓	✓	✓	✓	
Easy Access Filters	✓	✓	✓	✓	✓	✓
Very Low Noise Levels	✓	✓	✓	✓	✓	✓
Integral Cooker Hood					✓	
Built-In Humidistat	✓	✓	✓	✓	✓	
Kitchen Cupboard Installation	✓				✓	
Max Airflow @ 100Pa	68	79	117	185	68	117
Frost Protection	✓	✓	✓	✓	✓	✓
Delay-On	✓	✓	✓	✓	✓	✓
Wired Remote Control	O	O	O	O	O	
Wireless Boost	O	O	O	O	O	
Clean Filter Indicator (Time)	✓	✓	✓	✓	✓	✓
Fault Code Indicator	✓	✓	✓	✓	✓	✓
Potentiometer Adjustment						✓
Sentinel Control	✓	✓	✓	✓	✓	
Switched Live	✓	✓	✓	✓	✓	✓
Volt Free Contact	✓	✓	✓	✓	✓	
0V - 10V Proportional Control	✓	✓	✓	✓	✓	
BMS Input/Output	✓1	✓1	✓1	✓1	✓1	
Lightweight	✓	✓	✓	✓		✓
External Condensate	✓	✓	✓	✓	✓	✓
Horizontal Duct Option	✓	✓	✓	✓	✓	✓
Horizontal (Slab) Installation						
Left/Right Orientation	✓	✓	✓	✓	✓	✓
PIN Number Lock	✓	✓	✓	✓	✓	
Running Time Indicator	✓	✓	✓	✓	✓	
Enthalpy Heater Exchanger	O	O	O	O		
Mounting Options	Wall Surface	Wall Surface	Wall Surface	Wall Surface	Wall	Wall Surface

O - Denote Optional, 1- Seek technical advice from Vent-Axia. *ZMH rectangular spigot model.

Sentinel Demand Control

The Lo-Carbon Sentinel Kinetic Range can be used with a wide range of optional Vent-Axia controllers and sensors. Ranging from integral humidistats, through wireless controllers to wired remote sensors.

Wired Remote Controller

- Standard with horizontal units, optional extra with vertical units
- Supplied with 15 metres of cable (max length), the Wired Remote Controller duplicates all the features of the on-board control panel, allowing commissioning, diagnosis and user control
- Flush mounting, suitable for a single gang pattress box 16mm deep

Stock Ref
443283

Ambient Response Humidity Sensor

- Pullcord override and neon indicator
- Changeover relay switch
- Operating range: 30% - 90%RH
- Ambient operating temp. 5°C to 40°C
- 220-240V AC
- Will fit single gang box for surface mounting

Stock Ref
563550

Ecotronic Humidity Sensor

- Set Point adjustable
- Maximum switching load 1 amp in-ductive
- Pullcord override indicator
- Ambient operating temp. 0°C to 40°C
- Supply voltage 220-240V

Stock Ref
563532

Air Quality Sensor

- Ambient operating temp. 0°C to 50°C
- Min - Max mode or direct damper control
- Surface mounted
- 1 - 25 min O/R timer
- Supply voltage 220-240V

Stock Ref
563506

Normal Boost Switch

- A single gang switch to boost from low to high speeds on heat recovery systems
- 85 x 85 x 10mm (H x W x D)

Stock Ref
455213

Visonex PIR Sensor

- Fits any UK single gang mounting box
- Adjustable timer overrun (5-25 mins)
- Range of detection up to 10 metres
- Designed to meet IP43
- Ambient operating temp. range 0°C to 50°C

Stock Ref
459623

Momentary Push Switch

- Compatible with Sentinel Kinetic range, the momentary switch boosts the unit for 30 minutes
- 85 x 85 x 10mm (H x W x D)

Stock Ref
448929

Normal Boost Switch with Light Indicator

- Single gang switch with LED illumination when in the Boost condition
- 85 x 85 x 10mm (H x W x D)

Stock Ref
449060

Normal Boost Switch - Stainless Steel

- A single gang switch to operate normal/boost functions on MVHR systems
- Brushed stainless steel finish
- 90 x 90 x 18 (H x W x D)

Stock Ref
437320

Isolator Relay Controller

- Allows fan unit to be isolated from other mains circuit when used with trickle/boost switch or light switch control

Stock Ref
442030

Lo-Carbon Sentinel Kinetic BH

- Recognised in SAP PCDB
- Lightweight for easier installation
- Horizontal duct option for space-saving installations
- Fits within a 290mm deep kitchen cupboard
- Integrated digital controller for simple and accurate commissioning
- Plug and play controls; Humidistat
- BMS connectivity
- LS inputs (Light Switch)
- Horizontal duct options
- Acoustic Enclosure option for reduced breakout noise
- Acoustic Top Box option for reduced in-duct noise

Easy Installation

The Sentinel Kinetic models can be mounted vertically in a roof space, hallway cupboard or kitchen or within a kitchen cupboard. When mounted in an unheated area ducting and MVHR unit should be insulated. Ducting can be attached to the unit horizontally, vertically or both. Minimum internal depth of kitchen cupboard 290mm.

For scenarios where noise is a critical issue, an Acoustic Enclosure is available to reduce breakout noise and the Acoustic Top Box will reduce in-duct noise at key frequencies.

Left (L) or right (R) hand installation. The unit is supplied with duct spigots to outside on the right hand side. These can be reversed on site by simply removing the control panel, rotating the unit 180 degrees and re-attaching the control panel.

Spigot Options

The combination of spigot options allows installation in confined locations. If vertical and horizontal connection is required on the same outlet/inlet, additional spigots can be supplied.

The condensate drain can be taken out through the back, side or bottom of the unit. Using the fittings supplied, the final condensate connection is made outside the unit and can be completed after installation.

Integral Humidity Sensor (BH Models)

The integral humidity sensor increases speed in proportion to relative humidity levels, saving energy and reducing noise. The sensor also reacts to small but rapid increases in humidity, even if the normal trigger threshold is not reached. This unique feature ensures adequate ventilation, even for the smallest wet room. The night time relative humidity setback feature suppresses nuisance tripping as humidity gradually increases with falling temperature.

Models

Model	Stock Ref
Kinetic VS Right	438342
Kinetic BH Right	443319
Kinetic BH Right with Acoustic Enclosure & Top Box	479526
Kinetic BH Right with Acoustic Top Box	479525
Kinetic BH Right with Acoustic Enclosure	479524
Kinetic BH Left	443319L
Kinetic BH Left with Acoustic Enclosure & Top Box	479529
Kinetic BH Left with Acoustic Top Box	479528
Kinetic BH Left with Acoustic Enclosure	479527

(BH with summer bypass & humidity sensor)

Accessories

Model	Stock Ref
Wired Remote Controller	443283
LED alarm with 15m cable	448356
Acoustic Purge Fan	477988
Acoustic Purge Fan XL	479829
ISO 45% Coarse (G3) 2x Filter	442356
ISO ePM10 50% Pollen (M5) 1x Filter	444199
Anti Vibration Mounts	68MP033G

SAP PCDB performance (Kinetic VS)

	SAP 2009		SAP 2012	
	Thermal Efficiency %	SFP (W/l/s)	Thermal Efficiency %	SFP (W/l/s)
K+1	90	0.60	90	0.61
K+2	90	0.59	90	0.74
K+3	90	0.68	90	0.95
K+4	89	0.79	90	1.19
K+5	90	0.97	-	-

SEC Class

Model	SEC Class
Kinetic VS & BH	A

Dimensions (mm)

Unit

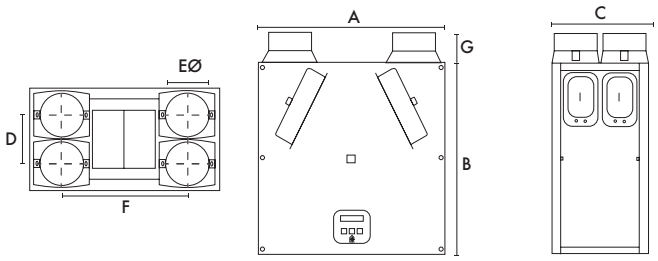

A	B	C	D	EØ	F	G
550	550	285	140	125	360	90

Weight: 15kg

Acoustic Solution

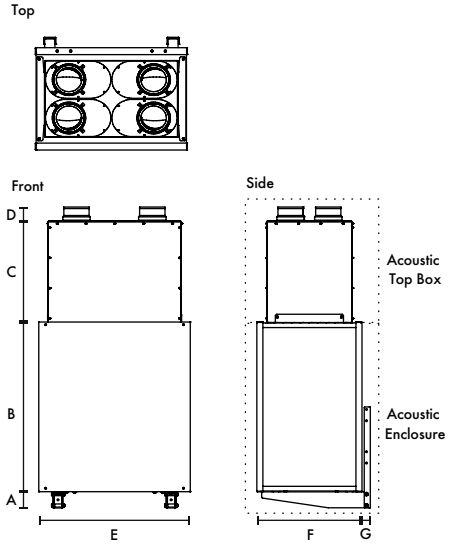

A	B	C	D	E	F	G	Acoustic Top Box kg	Acoustic Enclosure kg	Spigot
80	633	501	75	626	447	45	11	19	125

Performance

Fan speeds are fully adjustable within the performance range.

Vertical Spigots

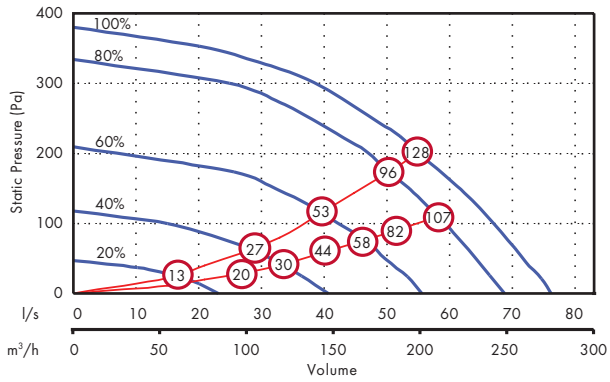

Horizontal Spigots

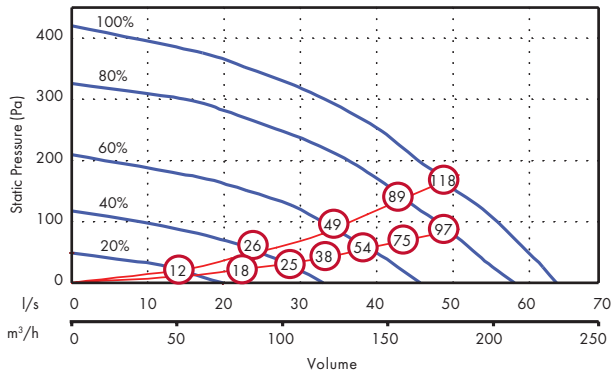

(x) figure relates to Wattage (both motors)

Sound Data (Kinetic VS & BH)

Speed	Test mode	Octave band, Hz, dB SWL 63	125	250	500	1k	2k	4k	8k	LwA	SPL dB(A) @ 3m
20%	Supply	52.9	52.9	46.5	41.7	39.3	29.3	19.3	22.8	44.4	26.9
	Extract	50.7	41.9	37.4	34.5	29.8	17.7	17.4	22.7	35.7	18.2
	Breakout	36	34.5	33.6	34.3	33.8	27.2	22.2	25.3	37.2	16.7
40%	Supply	57.1	64.1	56.8	50.6	49.7	41.1	32.8	26.4	54.7	37.2
	Extract	55.2	50.3	44.9	43	38.3	27.7	19.8	22.9	43.8	26.3
	Breakout	43.5	41.7	40.4	41.3	41.7	36.1	27.8	26.2	44.7	24.2
60%	Supply	71.3	72.5	68.5	57.6	56.4	51.1	42.7	38.1	63.6	46.1
	Extract	60.2	56.3	52	48.8	44.8	35.5	26.9	24.4	50.2	32.7
	Breakout	50.7	47.8	47.7	47.7	48.3	44.9	36.7	30	51.8	31.3
80%	Supply	66.3	74.8	71.2	62.8	61	56.3	49.8	46.7	67.3	49.8
	Extract	63.8	59.4	57.6	53.8	49.2	41.2	33.5	29	55.0	37.5
	Breakout	54.4	52.7	54	52.7	53.5	50.3	43.6	37.7	57.2	36.7
100%	Supply	70.3	75.7	73.9	66.3	63.5	59.7	53.2	50.6	70.0	52.5
	Extract	66.6	63.9	60.9	56.5	51.2	44.2	36.8	32.6	57.9	40.4
	Breakout	59.1	55.2	56.8	55.6	56.1	53.5	47.1	41.6	60.1	39.6

Sound Data (Kinetic VS & BH with Acoustic Solution)

Speed	Test mode	Octave band, Hz, dB SWL 63	125	250	500	1k	2k	4k	8k	LwA	SPL dB(A) @ 3m
20%	Supply	57.1	44.6	36.4	27.9	20.6	14.8	18.1	23.8	35.2	17.7
	Extract	54.4	40.1	29.6	22.2	17.5	14.5	17.8	23.5	31.1	13.6
	Breakout	37.5	33.8	29.1	22.9	17.0	14.0	17.8	23.6	27.7	7.2
40%	Supply	64.9	56.3	46.4	36.1	28.2	15.4	18.1	23.8	44.6	27.1
	Extract	60.2	46.8	35.7	28.2	21.9	14.8	18.1	23.7	36.6	19.1
	Breakout	46.0	43.6	36.3	30.4	23.9	15.9	18.1	23.6	33.5	13.0
60%	Supply	72.3	63.0	55.6	43.1	34.1	19.5	18.6	24.0	51.9	34.4
	Extract	61.4	53.3	43.4	34.7	27.2	15.5	18.1	23.8	41.4	23.9
	Breakout	52.2	50.5	44.4	38.2	33.5	23.8	19.3	23.8	41.0	20.5
80%	Supply	73.8	67.9	61.6	50.0	38.6	23.4	20.2	25.2	56.8	39.3
	Extract	68.6	58.2	50.5	40.5	31.1	17.2	18.2	23.9	47.5	30.0
	Breakout	65.6	55.5	50.5	43.8	39.7	32.7	24.9	24.0	47.4	26.9
100%	Supply	77.3	70.8	64.9	53.8	41.4	26.3	21.9	26.8	60.1	42.6
	Extract	71.5	60.6	53.5	43.9	33.4	19.1	18.5	24.0	50.5	33.0
	Breakout	69.0	58.4	53.4	47.1	43.0	37.5	29.9	24.9	51.1	30.6

Tested according to BS EN 13141-7:2010. Breakout quoted spherical. Supply and Extract quoted hemispherical. For in-duct data, end reflections are added based on the spigot size of the unit.

Lo-Carbon Sentinel Econiq

- Best in class SFP's and thermal efficiencies up to 93%
- Approved Document F aligned commissioning wizard
- New Sentinel-X wireless control platform
- Intelligent smart app control as standard
- Horizontal duct option for space-saving installations (M & L only)
- ISO ePM10 (M5) and ePM2.5 (F7) filtration options
- Sound levels as low as 15.5 dB(A) breakout
  - independently tested and verified by SRL
- Left/right handing via controls
- Developed and manufactured in the UK
- Acoustic enclosure and top box options (S only)

The Lo-Carbon Sentinel Econiq is Vent-Axia's latest flagship mechanical ventilation with heat recovery system. Designed and developed in the UK, it offers the highest level of comfort and functionality all year round.

Introducing a full range of products, with air performance suitable for all types of homes, the new Sentinel-X wireless controls platform delivers complete control over the home environment, provided through a full range of wired/wireless sensors and a smartphone app.

A Whole New Experience

The highly sculpted interior surfaces, designed using the latest CFD techniques, ensure airflows are maximised through the unit, minimising noise and energy use. This feature alone provides an experience, that will delight homeowners, providing the most discrete and highly efficient ventilation available.

Air Quality and Health

The MVHR filter options offer numerous benefits, including improved indoor air quality by removing allergens and particulate matter. They maintain the system's energy efficiency, reduce heating and cooling costs, and enhance the overall longevity of the system. Additionally, they capture bacteria, viruses and VOCs, promoting a healthier living environment. Regular filter maintenance extends the system's lifespan and ensures uninterrupted operation.

Whatever the outside environment, the system can help improve the indoor air quality by filtering out impurities, with ISO 60% Coarse (G4) supplied as standard, which can filter out sand, fine hair and particles larger than 10µm. Additional filtration can be achieved with a selection of optional filters, such as ISO ePM10 (M5), which can filter pollen, stone dust and particles smaller or equal to 10µm and ISO ePM2.5 (F7), which can filter out mould spores, bacteria and particles smaller or equal to 2.5µm.

The various sensor options allow for flexible installation in individual rooms, supporting effective management of the air in the home. For example, a CO_2 sensor located within a habitable room helps ensure a healthy and safe working environment. CO_2 levels managed at less than 1000ppm help promote cognitive function. A humidity sensor located in the bathroom detects high levels of moisture can support good indoor air quality.

Low Noise Levels

The Lo-Carbon Sentinel Econiq is one of the quietest systems on the market, with a noise level as low as 15.5 dB(A). The range is designed with an integral acoustic enclosure, made of steel, foam and expanded polypropylene (EPP), minimising breakout noise. The highly efficient motors are mounted on anti-vibration mounts to ensure minimal vibration transmission.

Demand Control Ventilation

The Vent-Axia Connect smartphone application allows a multitude of functions to be adjusted from the comfort of the sofa, available on iOS and Android.

With smartphone-compatible controls, the homeowner is in full control of their ventilation all year round. They have the flexibility to increase the ventilation rate during hot periods in the summer or reducing the speed to minimise running costs while away.

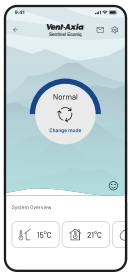

The Sentinel control logic built within the MVHR ensures the system operates optimally with automated functions such as frost protection and summer bypass, providing comfort in the home.

Download on the App Store

GET IT ON Google Play

Integral Humidity Sensor

The integral humidity sensor increases speed in proportion to relative humidity levels, saving energy and reducing noise. The sensor also reacts to small but rapid increases in humidity, even if the normal trigger threshold is not reached. This unique feature ensures adequate ventilation, even for the smallest wet room. The nighttime relative humidity setback feature suppresses nuisance tripping as humidity gradually increases with falling temperatures.

Airtight Buildings

Low-energy buildings typically have very low leakage rates (below $3m^3/(h.m^2)$ at 50Pa). This reduces the effectiveness of the standard frost protection strategy which imbalances the airflows.

Spigot Options (M & L only)

The inclusion of horizontal spigots allows for flexible installation in tight spaces. It is possible to use both vertical and horizontal connections.

Model

Description	Stock Ref
Sentinel Econiq S	499883
Sentinel Econiq S with Acoustic Top Box & Enclosure	479550A
Sentinel Econiq S with Acoustic Top Box	479549A
Sentinel Econiq S with Acoustic Enclosure	479548A
Sentinel Econiq M	499632
Sentinel Econiq L	499641

Accessories

Description	Stock Ref
Volt-free Expansion (Four additional inputs)	472697
Switched Live Expansion (Two additional inputs)	472699
0V - 10V Input Board (Two inputs)	472701
Acoustic Purge Fan	477988
Acoustic Purge Fan XL	479829
Wall Mounting Kit for Controller	411628

Sensor Overview

Power	Colour	CO_2	PIR	AIM Alarm	Temp.	Humidity	Wireless	4 Speed Switch	Stock Ref
Battery	White				✓	✓	✓		496431
Battery	White				✓	✓	✓		496442*
Battery	White				✓	✓	✓	✓	496437
Battery	Black				✓	✓	✓	✓	497689
0-10V	White				✓	✓			496428
0-10V	White	✓			✓	✓			496432
240V	White				✓	✓	✓		496429
240V	White	✓			✓	✓	✓		496433
240V	White		✓				✓		496438
240V	White				✓	✓	✓	✓	496620
240V	Black				✓	✓	✓	✓	497693
240V	White				✓	✓		✓	496621
240V	Black				✓	✓		✓	497697
240V	White			✓	✓	✓	✓		496441

*External

For more Controller & Sensor information go to page F21

Spare Filters

Sentinel Econiq S

Description	Stock Ref
ISO 60% Coarse (G4) Filter 2 per Pack	411689
ISO ePM10 50% (M5) Filter 1 per Pack	472669
ISO ePM2.5 70% (F7) Filter 1 per Pack	472671

Sentinel Econiq M & L

Description	Stock Ref
ISO 60% Coarse (G4) Filter 2 per Pack	411690
ISO ePM10 50% (M5) Filter 1 per Pack	411691
ISO ePM2.5 70% (F7) Filter 1 per Pack	411692

SEC Class

Model	SEC Class
Econiq S	A+
Econiq M	A+
Econiq L	A+

SAP PCDB Test Results

Econiq S

	Thermal Efficiency %	SFP (W/l/s)
K+1	93	0.39
K+2	92	0.46
K+3	91	0.55
K+4	91	0.70
K+5	90	0.85
K+6	89	1.07
K+7	89	1.31

Econiq M

	Thermal Efficiency %	SFP (W/l/s)
K+1	93	0.41
K+2	93	0.41
K+3	92	0.46
K+4	92	0.55
K+5	91	0.66
K+6	91	0.81
K+7	90	1.00

Econiq L

	Thermal Efficiency %	SFP (W/l/s)
K+1	93	0.56
K+2	93	0.53
K+3	93	0.56
K+4	92	0.62
K+5	91	0.72
K+6	91	0.84
K+7	90	1.01

Model Range Overview

	Sentinel Econiq S	Sentinel Econiq M	Sentinel Econiq L
Recommended max system flow (l/s) @ Pressure (Pa)	97 @ 150	125 @ 150	167 @ 150
Acoustic Enclosure	✓		
Acoustic Top Box	✓		
Part F Compliant App Commissioning Certificate	✓	✓	✓
RF858 connectivity, 802.11b/g/n Wi-Fi and Bluetooth low energy 4.2	✓	✓	✓
Spigot Options Vertical - Horizontal	Vertical	Vertical & Horizontal	Vertical & Horizontal
Spigot size 125mm or 200mm	125	200	200
Left/Right Hand Orientation Through Control	✓	✓	✓
Fully automatic 100% summer bypass	✓	✓	✓
Active Frost Protection to -20°C	✓	✓	✓
Fault Code Indicator	✓	✓	✓
Easy Access Filters: ISO Coarse 65% (G4)	✓	✓	✓
Easy Access Filters: ISO ePM10 50% (M5)	O	O	O
Easy Access Filters: ISO ePM2.5 70% (F7)	O	O	O
Clean Filter Indicator (Time frame)	✓	✓	✓
PIN Number Lock	✓	✓	✓
Running Time Indicator	✓	✓	✓
Enthalpy Heat Exchanger	O	O	O
Soft-Start Boost	✓	✓	✓
Delay-On	✓	✓	✓
Number of controllable speeds	4	4	4
Installer function to copy/load unit setup	✓	✓	✓
Inputs 2 x 0-10V; 2 x LS; 5 x Volt-Free	✓	✓	✓
Integral Humidistat	✓	✓	✓
Relay outputs - For example control heaters or geothermal heat exchanger	O	O	O
BMS - modbus supported over RS485	✓	✓	✓
Operating ambient temperature (°C)	-20 to +40	-20 to +40	-20 to +40
Operating Humidity (%RH)	0 to 95	0 to 95	0 to 95
Mounting	Wall or Floor	Wall or Floor	Wall or Floor
Maintenance access	From Front	From Front	From Front

O - Denote Optional

Consultant's Specification

Specification

The supply and extract ventilation unit shall be the Lo-Carbon Sentinel Econiq S, M or L as manufactured by Vent-Axia and shall be sized as indicated on the drawings and shall be in accordance with the particular specification.

The unit shall be fully insulated for thermal and acoustic performance and shall incorporate a counterflow multi plate heat exchanger with an independently verified thermal efficiency of up to 93%. The heat exchanger shall be protected by ISO 60% Coarse (G4) Grade filters on intake and extract airflows, with the option of a pre-filter. The unit shall have the facility to accommodate ISO ePM10 (M5) and ePM2.5 (F7) filters. The filters shall be accessible via tool-free access doors. The heat exchanger, motors, summer bypass and all other serviceable parts shall be accessible through the front of the unit.

Supply air to the room shall be pre-heated by an optional pre-heater and the extract air via the integrated composite plastic counter-flow heat recovery cell. The Sentinel Econiq shall automatically vary the ventilation rate via EC/DC motors, as it receives signals from optional or in-built sensor inputs. When a signal is received, the fans shall either vary their speed proportionally or on a trickle/boost principle.

The unit shall have the facility to commission the supply and extract fans individually via in-built minimum and maximum speed adjustment, alternative wired remote-control unit or via a compatible smartphone using the Vent-Axia Connect application. The fans themselves shall have independent, infinitely variable speed control.

Unit Specification

The unit shall be manufactured with an ABS Outer case construction, with the ability to alter the spigot configuration via the on board controller. The unit shall have a high-efficiency composite plastic counter-flow heat exchanger, supply, and extract filters (up to ISO ePM2.5 (F7)), automatic 100% summer bypass, integral minimum and maximum infinitely variable speed controls with facia mounted failure indication. The unit shall have low-energy, high-efficiency EC/DC fan/motor assemblies with sealed for life bearings. The impellers shall be high-efficiency backward curved centrifugal type, achieving an SFP as low as 0.38W/l/s (EN 308).

The unit shall have a heat exchanger cell with a thermal efficiency of up to 93% when tested to EN 308. This shall be protected by ISO 60% Coarse (G4) grade synthetic filters on supply and extract, with the option of ISO ePM10 (M5), ISO ePM2.5 (F7) or external carbon activated filters. The unit shall have two condensate drain outlets for handing to be defined onsite and during commissioning.

The unit shall have wireless control capability options, using RF868 connectivity, 802.11b/g/n Wi-Fi and Bluetooth low energy 4.2. The unit shall use RF868 to connect to a wide ecosystem of wireless sensors including but not limited to CO_2, temperature, and relative humidity. The unit shall be able to engage Wi-Fi to connect to local devices and create a local area network to allow for a larger network to be created for commissioning. The unit shall have Bluetooth low energy 4.2 to allow connectivity onto compatible smartphone devices.

The unit shall be constructed with a removable tool-free front panel which gives access to the removable on-board controller and other accessories. The EPS panel can then be removed with 4 screws allowing full maintenance access. This shall provide access to the following:

- ✓ Supply or extract fan
- ✓ Heat exchanger
- ✓ Access to the electrical connections

The MVHR unit shall incorporate an Expanded Polystyrene (EPS) inner chassis with custom motor and impeller mounting features. The inner chassis will assist in reducing noise and act as a large anti-vibration mount avoiding transmission through to the back mounting plate or the base of the unit. The MVHR unit shall be tested to ensure it meets the maximum allowable vibration of no more than 1mm/s, measured on the unit wall fixing points.

The MVHR unit will be tested to ensure it meets the maximum allowable vibration of no more than 1mm/s, measured on the unit wall fixing points. Access shall be provided for wiring termination and setup/commissioning. The unit can be supplied with either a backlit user interface or a blank plate, both of which shall be removable for remote mounting if required. Filters shall be accessed via the two filter drawers found near the top of the unit, the S shall have filter drawers and the M and L shall have filter caps.

Units shall be manufactured by Vent-Axia Ltd.

Standard Controls

The Lo-Carbon Sentinel Econiq shall incorporate the following functions through a user interface fitted by the manufacturer or a paired smartphone with the Vent-Axia Connect application: -

- ✓ Integral infinitely variable fan speed control on supply and extract.
- ✓ 6 speeds; 4 adjustable
- ✓ Left or Right hand spigot configuration, programmable during commissioning
- ✓ Tool free filter access
- ✓ Integral BMS interfaces – control and status indication
- ✓ Heating interlocks
- ✓ 24V external sensor supply, eg PIR sensor
- ✓ 0-10V proportional speed adjustment
- ✓ Volt free contacts
- ✓ Fully automatic summer bypass
- ✓ Filter check facility
- ✓ Control panel PIN number lock

The unit shall incorporate:

- ✓ An integral humidity sensor with the following features:
  Ambient Response; Raises the humidity trigger point as dwelling temperature reduces.
- ✓ Rapid Response: Monitors the rate of change in humidity and triggers increased airflow even if the humidity trigger threshold is not reached.
- ✓ Proportional Response; incrementally increases the fan speed to reduce noise and reduce energy consumption.
- ✓ RS485 connectivity – Long distance cabling to support multiple sensor connections.
- ✓ RF868 connectivity – Radio reference 868 MHZ for multiple wireless sensors pairing Bluetooth low energy 4.2 – Enable pairing within compatible smartphone device
- ✓ 802.11b/g/n Wi-Fi – Enable localised access point or connect to the local area network using the Vent-Axia Connect application, via a compatible smartphone device
- ✓ The unit shall incorporate an automatic 100% summer bypass damper which monitors internal and external temperatures to maintain the user comfort temperature (default 21°C) :
  - 'Evening Fresh' turns the unit to maximum speed with the bypass operational for 2 hours or until the user comfort temperature is reached (default 21°C).
  - 'Night Time Fresh' will run the unit at maximum speed with the bypass operational throughout the night or until the dwelling reaches minimum temperature (default 14°C).

Independently acoustically tested to BS EN 13141-7:2010

Consultant's Specification

Operation

The supply and extract ventilation unit shall be a Sentinel Kinetic as manufactured by Vent-Axia and shall be sized as indicated on the drawings and shall be in accordance with the particular specification.

Supply air to the room shall be pre-heated by the extract air via the integrated composite plastic counterflow heat recovery cell. The Sentinel Kinetic shall automatically vary the ventilation rate via EC/DC motors, as it receives signals from one of the optional interconnected sensors. When a signal is received, the fans shall either vary their speed proportionally or on a trickle and boost principle.

The unit shall have the facility to commission the supply and extract fans individually via in-built minimum and maximum speed adjustment, or alternative wired remote control unit. The fans themselves shall have independent, infinitely variable speed control.

Unit Specification

The unit shall be manufactured with an ABS outer case construction, and incorporate a reversible core to allow for left or right hand mounting.

The unit shall have a high efficiency composite plastic counterflow heat exchanger, supply and extract filters, automatic summer bypass, integral minimum and maximum infinitely variable speed controls with facia mounted failure indication. The unit shall have low energy, high efficiency EC/DC fan/motor assemblies with sealed for life bearings. The impellers shall be high efficiency forward curved centrifugal type.

The unit shall have a heat exchanger cell with a thermal efficiency of up to 92% when tested to EN 308. This shall be protected by ISO 45% Coarse (G3) grade synthetic filters on supply and extract. Complete with a condensate drip tray and drain connection.

The unit shall be constructed with a removable Core allowing full maintenance access. The removable Core shall provide access to the following:

- ✓ Supply and extract filter
- ✓ Heat exchanger
- ✓ Access to the electrical connections

To reduce breakout noise, the MVHR unit shall be provided with an Acoustic Enclosure of steel construction lined with class '0' acoustic foam. To reduce in-duct noise, the top of the MVHR shall be fitted with an Acoustic Top Box to provide attenuation to the 4 ducts of the unit. This Acoustic Top Box shall be of steel construction lined with acoustic class '0' foam with the MVHR spigots linked to the Top Box via 4 separate attenuated ducts. The acoustic enclosure and top box shall each be independently tested for noise to BS EN 13141-7.

The MVHR unit shall incorporate an Expanded Polystyrene (EPS) inner chassis with custom motor and impeller mounting features. The inner chassis will assist in reducing noise and act as a large anti-vibration mount avoiding transmission through to the back mounting plate or the base of the unit.

The MVHR unit shall be tested to ensure it meets the maximum allowable vibration of no more than 1mm/s, measured on the unit wall fixing points.

Access shall be provided for wiring termination and setup/commissioning. The backlit LCD user interface therein shall be removable for remote mounting if required.

Units shall be as manufactured by Vent-Axia Ltd.

Standard Controls

All Sentinel Kinetic units shall incorporate the following functions integrally mounted, pre-wired and factory fitted by the manufacturer:

- ✓ Integral infinitely variable fan speed control on supply and extract
- ✓ Integral min/max ventilation control/set point
- ✓ Integral BMS interfaces – control and status indication
- ✓ Heating interlocks
- ✓ 0-10V proportional speed adjustment
- ✓ Volt free contacts
- ✓ 24V sensor supply
- ✓ Integral on/off or trickle boost function from remote switch e.g. PIR occupancy detector
- ✓ The unit shall be controlled by the 'Sentinel' control devices (enablers and sensors) as detailed in the schedule or on the drawings
- ✓ Fully automatic summer bypass
- ✓ Switched Live input with adjustable 'delay-on' feature
- ✓ Fan failure or component failure indicated via individual fault code display
- ✓ Running time counter
- ✓ Control panel PIN number lock
- ✓ Automatic frost protection effective to -20°C
- ✓ Tool free filter access
- ✓ The unit shall incorporate ('H' models) an integral humidity sensor with the following features:
  - Ambient Response; Raises the humidity trigger point as dwelling temperature reduces
  - Rapid Response; Monitors the rate of change in humidity and triggers increased airflow even if the humidity trigger threshold is not reached
  - Proportional Response; Incrementally increases the fan speed to reduce noise and reduce energy consumption

Mounting Option

Wall Surface

Airflow Direction

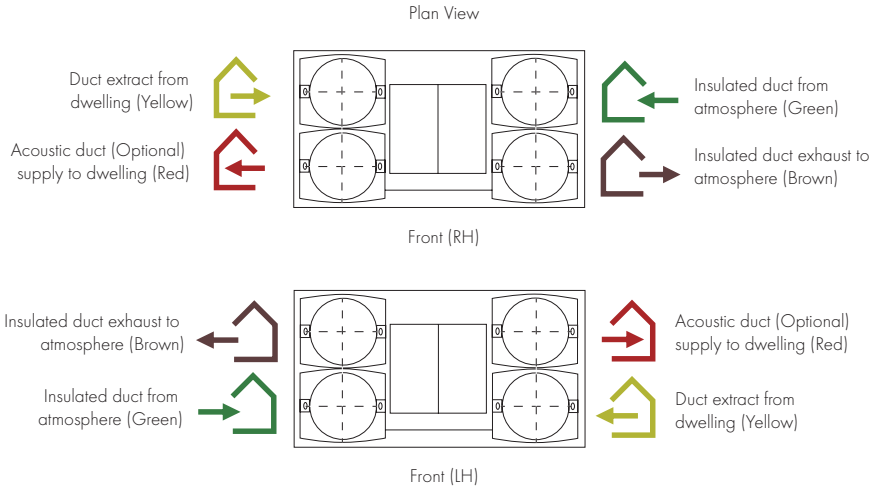

Electrical Connection

Please note: Electrical connection should be carried out by an appropriately qualified person and in accordance with current wiring regulations.

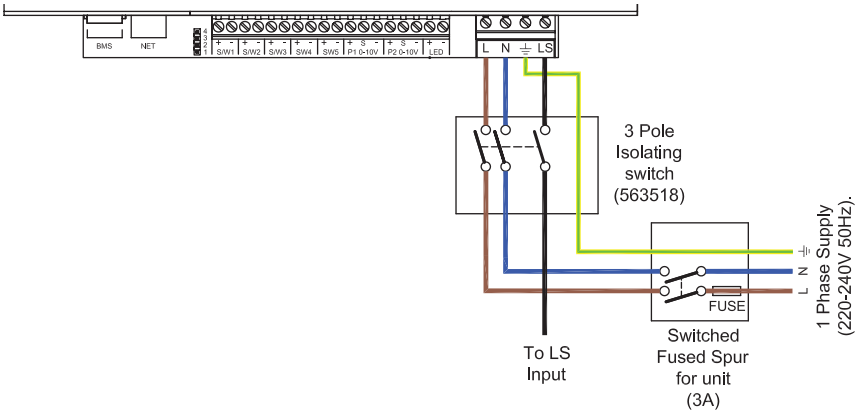

Trickle to Boost by Trickle/Boost Switch

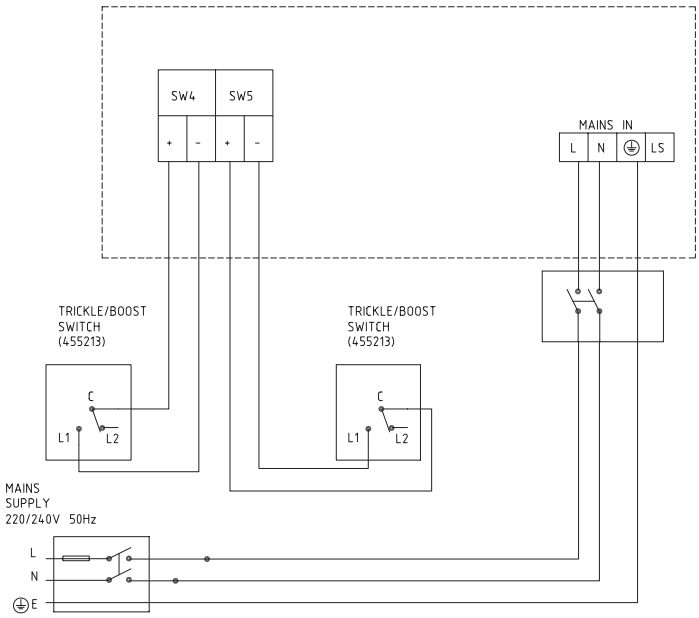

Lo-Carbon Sentinel Kinetic FH

- Acoustic Enclosure option for reduced breakout noise
- Acoustic Top Box option for reduced in-duct noise
- Lightweight for easier installation
- Horizontal duct option for space-saving installations
- Integrated digital controller for simple and accurate commissioning
- Plug and play controls; Humidistat
- BMS connectivity
- LS inputs (Light Switch)
- Volt-free inputs
- Self diagnosis for simplified fault finding
- Adjustable delay On/delay Off timer

Easy Installation

The Sentinel Kinetic models can be mounted vertically in a roof space or in an appropriate cupboard within the dwelling. When mounted in an unheated area the ducting and unit must be insulated in accordance with the Domestic Ventilation Compliance Guide. Ducting can be attached to the unit horizontally, vertically or both.

For scenarios where noise is a critical issue, an Acoustic Enclosure is available to reduce breakout noise and the Acoustic Top Box will reduce in-duct noise at key frequencies.

Left (L) or right (R) hand installation. Left hand and right hand units are available.

Spigot Options

The combination of spigot options allows installation in confined locations. If vertical and horizontal connection is required on the same outlet/inlet, additional spigots can be supplied.

The condensate drain can be taken out through the back, side or bottom of the unit. Using the fittings supplied, the final condensate connection is made outside the unit and can be completed after installation.

Integral Humidity Sensor

The integral humidity sensor increases speed in proportion to relative humidity levels, saving energy and reducing noise. The sensor also reacts to small but rapid increases in humidity, even if the normal trigger threshold is not reached. This unique feature ensures adequate ventilation, even for the smallest wet room. The night time relative humidity setback feature suppresses nuisance tripping as humidity gradually increases with falling temperature.

Model

Model	Stock Ref
Sentinel Kinetic FH Right	408167
Sentinel Kinetic FH Right with Acoustic Top Box & Enclosure	479532
Sentinel Kinetic FH Right with Acoustic Top Box	479531
Sentinel Kinetic FH Right with Acoustic Enclosure	479530
Sentinel Kinetic FH Left	408169
Sentinel Kinetic FH Left with Acoustic Top Box & Enclosure	479535
Sentinel Kinetic FH Left with Acoustic Top Box	479534
Sentinel Kinetic FH Left with Acoustic Enclosure	479533

(FH comes with summer bypass & humidity sensor)

Accessories

Model	Stock Ref
Wired Remote Controller	443283
LED alarm with 15m cable	448356
ISO 45% Coarse (G3) 2x Filter	409764
ISO ePM10 50% Pollen (M5) 2x Filter	472153
Anti Vibration Mounts	68MP033G
Acoustic Purge Fan	477988
Acoustic Purge Fan XL	479829

SAP PCDB performance

	SAP 2009		SAP 2012	
	Thermal Efficiency %	SFP (W/l/s)	Thermal Efficiency %	SFP (W/l/s)
K+1	90	0.46	89	0.47
K+2	89	0.45	88	0.54
K+3	88	0.50	86	0.65
K+4	87	0.60	84	0.84
K+5	85	0.70	84	1.01

SEC Class

Model	SEC Class
Kinetic FH/FHL	A+

Dimensions (mm)

Unit

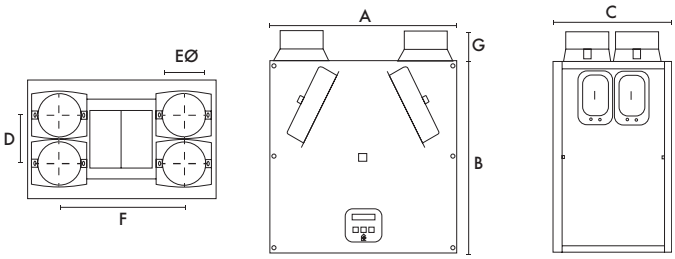

A	B	C	D	EØ	F	G
555	550	350	140	125	360	90

Weight: 18kg

Acoustic Solution

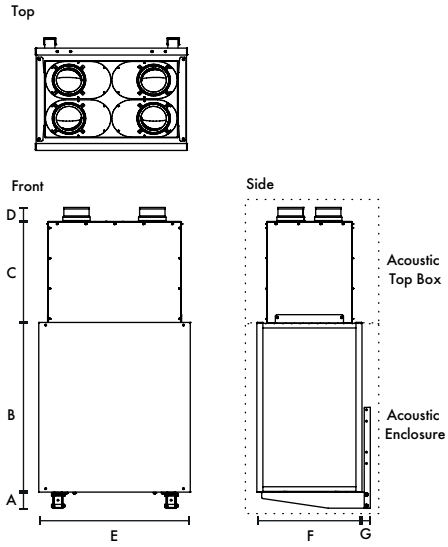

A	B	C	D	E	F	G	Acoustic Top Box kg	Acoustic Enclosure kg	Spigot
80	633	501	75	626	447	45	11	19	125

Sound Data (Unit only)

Speed	Port Test mode	63	125	250	500	1k	2k	4k	8k	LwA	SPL dB(A) @ 3m
		Octave band, Hz, dB SWL									
20%	Supply	66.2	67.2	54.3	48.0	42.1	33.3	22.5	25.6	53.9	36.4
	Extract	57.7	56.6	47.2	43.5	35.3	24.1	19.6	25.7	45.7	28.2
	Breakout	41.2	47.0	41.7	39.5	34.6	30.4	22.5	25.7	41.0	20.5
40%	Supply	68.9	66.4	68.8	57.8	52.1	44.9	35.3	28.8	62.4	44.9
	Extract	66.8	56.1	56.9	52.1	44.7	34.6	23.8	25.8	53.2	35.7
	Breakout	47.3	47.5	56.4	48.0	44.0	39.6	32.8	29.1	51.0	30.5
60%	Supply	72.8	72.5	82.2	64.4	59.9	53.8	46.2	40.3	74.4	56.9
	Extract	67.3	61.9	66.5	58.9	52.2	42.7	32.6	27.6	61.1	43.6
	Breakout	53.9	53.2	65.9	55.8	52.2	48.2	42.5	39.3	61.0	40.5
80%	Supply	85.0	75.3	72.5	77.9	65.3	58.8	52.1	47.4	76.0	58.5
	Extract	83.5	65.2	65.0	65.5	57.0	47.7	37.9	31.3	65.5	48.0
	Breakout	56.4	56.4	60.4	69.8	56.7	53.2	47.8	42.0	66.5	46.0
100%	Supply	95.5	77.7	74.0	80.4	68.7	62.9	56.9	52.4	79.1	61.6
	Extract	83.3	68.3	66.9	71.2	60.7	51.4	42.4	36.1	69.7	52.2
	Breakout	62.1	59.7	62.9	70.0	61.0	57.3	52.3	46.9	68.0	47.5

Sound Data (Unit with Acoustic Solution)

Speed	Port Test mode	63	125	250	500	1k	2k	4k	8k	LwA	SPL dB(A) @ 3m
		Octave band, Hz, dB SWL									
20%	Supply	58.2	62.1	46.8	33.7	21.1	14.1	18.2	24.1	47.5	30.0
	Extract	55.9	48.3	37.1	26.8	17.7	14.5	18.0	23.7	36.2	18.7
	Breakout	41.8	45.1	38.7	29.1	18.4	13.7	17.8	23.5	34.7	14.2
40%	Supply	66.5	59.3	59.3	43.5	30.5	15.9	17.9	23.5	52.1	34.6
	Extract	57.4	49.7	50.9	36.2	23.5	15.0	18.1	23.7	43.5	26.0
	Breakout	47.1	47.6	49.8	38.4	30.2	21.0	18.5	23.6	42.6	22.1
60%	Supply	69.5	66.0	66.5	50.7	40.2	20.6	18.8	24.2	59.3	41.8
	Extract	62.4	57.1	53.7	43.2	32.5	19.5	18.5	23.8	48.0	30.5
	Breakout	51.8	54.5	54.4	45.2	38.9	32.1	24.4	24.0	49.0	28.5
80%	Supply	78.5	68.9	63.3	61.3	45.1	25.7	20.7	25.8	61.0	43.5
	Extract	74.2	59.8	55.8	49.9	37.8	24.4	20.5	23.9	52.4	34.9
	Breakout	57.6	57.6	56.4	52.0	43.7	38.0	31.6	25.6	52.2	31.7
100%	Supply	75.7	70.8	67.1	65.7	48.2	30.4	23.6	27.8	64.6	47.1
	Extract	75.6	62.9	59.5	53.1	42.2	29.4	24.3	24.7	55.7	38.2
	Breakout	64.3	59.8	60.3	56.8	47.1	42.2	36.9	28.8	56.4	35.9

Tested according to BS EN 13141-7:2010. Breakout quoted spherical. Supply and Extract quoted hemispherical. For in-duct data, end reflections are added based on the spigot size of the unit.

Performance

Fan speeds are fully adjustable within the performance range.

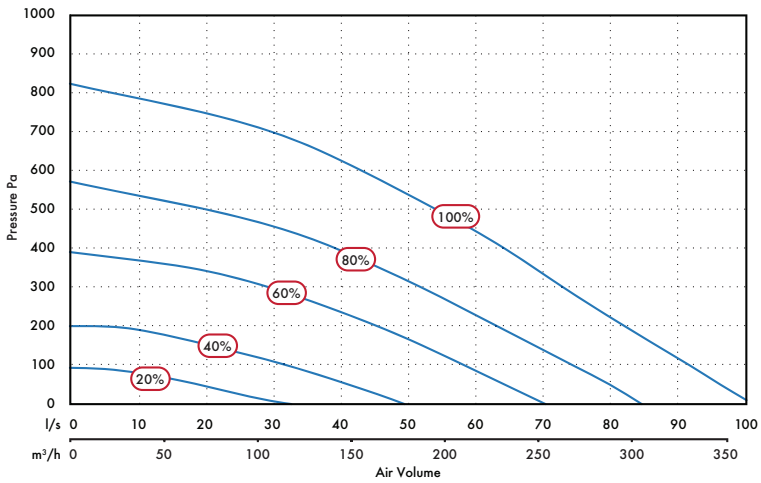

Consultant's Specification

Operation

The supply and extract ventilation unit shall be a Sentinel Kinetic as manufactured by Vent-Axia and shall be sized as indicated on the drawings and shall be in accordance with the particular specification.

Supply air to the room shall be pre-heated by the extract air via the integrated composite plastic counterflow heat recovery cell. The Sentinel Kinetic shall automatically vary the ventilation rate via EC/DC motors, as it receives signals from one of the optional interconnected sensors. When a signal is received, the fans shall either vary their speed proportionally or on a trickle and boost principle.

The unit shall have the facility to commission the supply and extract fans individually via in-built minimum and maximum speed adjustment, or alternative wired remote control unit. The fans themselves shall have independent, infinitely variable speed control.

Unit Specification

The unit shall be manufactured with an ABS outer case construction, and incorporate a reversible core to allow for left or right hand mounting.

The unit shall have a high efficiency composite plastic counterflow heat exchanger, supply and extract filters, automatic summer bypass, integral minimum and maximum infinitely variable speed controls with facia mounted failure indication. The unit shall have low energy, high efficiency EC/DC fan/motor assemblies with sealed for life bearings. The impellers shall be high efficiency backward curved centrifugal type.

The unit shall have a heat exchanger cell with a thermal efficiency of up to 90% when tested to EN 308. This shall be protected by ISO 45% Coarse (G3) grade synthetic filters on supply and extract. Complete with a condensate drip tray and drain connection.

To reduce breakout noise, the MVHR unit shall be provided with an Acoustic Enclosure of steel construction lined with class '0' acoustic foam. To reduce in-duct noise, the top of the MVHR shall be fitted with an Acoustic Top Box to provide attenuation to the 4 ducts of the unit. This Acoustic Top Box shall be of steel construction lined with acoustic class '0' foam with the MVHR spigots linked to the Top Box via 4 separate attenuated ducts. The acoustic enclosure and top box shall each be independently tested for noise to BS EN 13141-7.

The MVHR unit shall incorporate an Expanded Polystyrene (EPS) inner chassis with custom motor and impeller mounting features. The inner chassis will assist in reducing noise and act as a large anti-vibration mount avoiding transmission through to the back mounting plate or base of the unit.

The MVHR unit will be tested to ensure it meets the maximum allowable vibration of no more than 1mm/s, measured on the unit wall fixing points.

The unit shall be constructed with a removable Core allowing full maintenance access. The removable Core shall provide access to the following:

- ✓ Supply and extract filter
- ✓ Heat exchanger
- ✓ Access to the electrical connections

Access shall be provided for wiring termination and setup/commissioning. The backlit LCD user interface therein shall be removable for remote mounting if required.

Units shall be as manufactured by Vent-Axia Ltd.

Acoustically tested to BS EN 13141-7

Standard Controls

All Sentinel Kinetic units shall incorporate the following functions integrally mounted, pre-wired and factory fitted by the manufacturer:

- ✓ Integral infinitely variable fan speed control on supply and extract
- ✓ Integral min/max ventilation control/set point
- ✓ Integral BMS interfaces – control and status indication
- ✓ Heating interlocks
- ✓ 0-10V proportional speed adjustment
- ✓ Volt free contacts
- ✓ 24V sensor supply
- ✓ Integral on/off or trickle boost function from remote switch e.g. PIR occupancy detector
- ✓ The unit shall be controlled by the 'Sentinel' control devices (enablers and sensors) as detailed in the schedule or on the drawings
- ✓ Fully automatic summer bypass
- ✓ Switched Live input with adjustable 'delay-on' feature
- ✓ Fan failure or component failure indicated via individual fault code display
- ✓ Running time counter
- ✓ Control panel PIN number lock
- ✓ Automatic frost protection effective to -20°C
- ✓ Tool free filter access
- ✓ The unit shall incorporate ('H' models) an integral humidity sensor with the following features:
  - Ambient Response; Raises the humidity trigger point as dwelling temperature reduces
  - Rapid Response; Monitors the rate of change in humidity and triggers increased airflow even if the humidity trigger threshold is not reached
  - Proportional Response; Incrementally increases the fan speed to reduce noise and reduce energy consumption

Airflow Direction

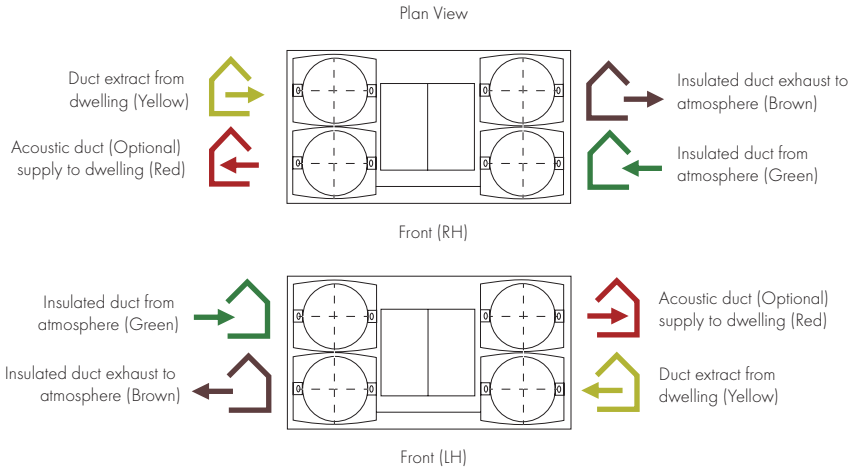

Electrical Connection

Please note: Electrical connection should be carried out by an appropriately qualified person and in accordance with current wiring regulations.

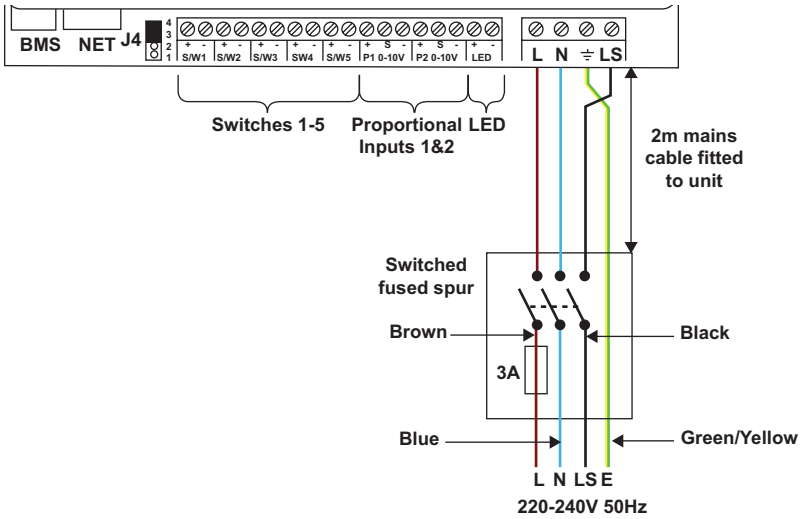

Trickle to Boost by Trickle/Boost Switch

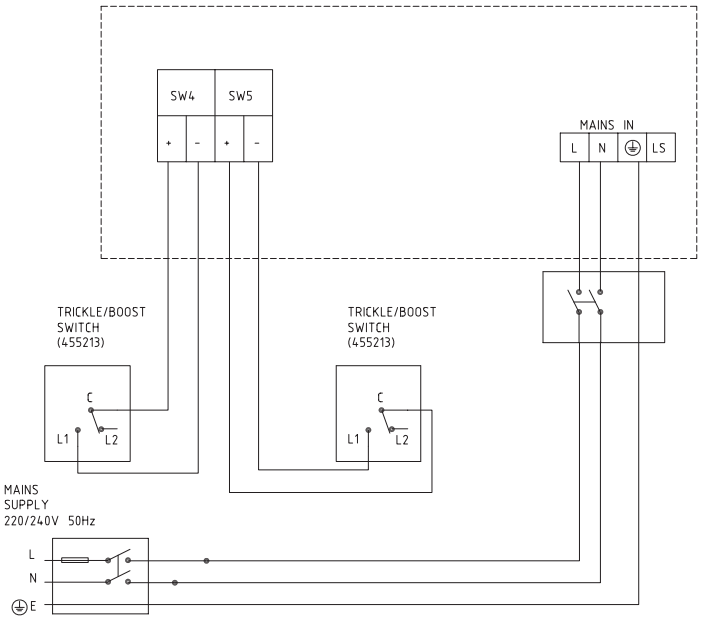

Consultant's Specification

Operation

The supply and extract ventilation unit shall be as Sentinel Kinetic Plus as manufactured by Vent-Axia and shall be sized as indicated on the drawings and shall be in accordance with the particular specification.

Supply air to the room shall be pre-heated by the extract air via the integrated composite plastic counterflow heat recovery cell. The Sentinel Kinetic Plus shall automatically vary the ventilation rate via EC/DC motors, as it receives signals from one of the optional interconnected sensors.

When a signal is received, the fans shall either vary their speed proportionally or on a trickle and boost principle.

The unit shall have the facility to commission the supply and extract fans individually via in-built minimum and maximum speed adjustment, or alternative wired remote control unit. The fans themselves shall have independent, infinitely variable speed control.

Unit Specification

The unit shall be manufactured with an ABS outer case construction, and incorporate a reversible core to allow for left or right hand mounting.

The unit shall have a high efficiency composite plastic counterflow heat exchanger, supply and extract filters, automatic summer bypass, integral minimum and maximum infinitely variable speed controls with facia mounted failure indication.

The unit shall have low energy, high efficiency EC/DC fan/motor assemblies with sealed for life bearings. The impellers shall be high efficiency backward curved centrifugal type.

The unit shall have a heat exchanger cell with a thermal efficiency of up to 92% when tested to EN 308. This shall be protected by ISO 45% Coarse (G3) grade synthetic filters on supply and extract. Complete with a condensate drip tray and drain connection.

To reduce breakout noise, the MVHR unit shall be provided with an Acoustic Enclosure of steel construction lined with class '0' acoustic foam. To reduce in-duct noise, the top of the MVHR shall be fitted with an Acoustic Top Box to provide attenuation to the 4 ducts of the unit. This Acoustic Top Box shall be of steel construction lined with acoustic class '0' foam with the MVHR spigots linked to the Top Box via 4 separate attenuated ducts. The acoustic enclosure and top box shall each be independently tested for noise to BS EN 13141-7.

The unit shall be constructed with a removable Core allowing full maintenance access. The removable Core shall provide access to the following:

- ✓ Supply and extract filter
- ✓ Heat exchanger
- ✓ Access to the electrical connections

Access shall be provided for wiring termination and setup/commissioning. The backlit LCD user interface therein may be duplicated for remote mounting if required.

Units shall be as manufactured by Vent-Axia Ltd.

The MVHR unit shall incorporate an Expanded Polystyrene (EPS) inner chassis with custom motor and impeller mounting features. The inner chassis will assist in reducing noise and act as a large anti-vibration mount to avoid transmission through to the back mounting plate or the base of the unit.

The MVHR unit shall be tested to ensure it meets the maximum allowable vibration of no more than 1mm/s, measured on the unit wall fixing points.

Sound tested to BS EN 13141-7:2010

Standard Controls

All Sentinel Kinetic units shall incorporate the following functions integrally mounted, pre-wired and factory fitted by the manufacturer:

- ✓ Integral infinitely variable fan speed control on supply and extract
- ✓ Integral min/max ventilation control/set point
- ✓ Integral BMS input/output interfaces – control and status indication
- ✓ Heating interlocks
- ✓ 0-10V proportional speed adjustment
- ✓ Volt free contacts
- ✓ 24V sensor supply
- ✓ Integral on/off or trickle boost function from remote switch, e.g. PIR occupancy detector
- ✓ Fully automatic summer bypass
- ✓ Switched Live input with adjustable 'delay-on' feature
- ✓ Fan failure or component failure indicated via individual fault code display
- ✓ Running time counter
- ✓ Control panel PIN number lock
- ✓ Automatic frost protection effective to -20°C
- ✓ The unit shall incorporate an integral humidity sensor with the following features:
  - Ambient Response; Raises the humidity trigger point as dwelling temperature reduces
  - Rapid Response: Monitors the rate of change in humidity and triggers increased airflow even if the humidity trigger threshold is not reached
  - Proportional Response; Incrementally increases the fan speed to reduce noise and reduce energy consumption
- ✓ The unit shall be controlled by the 'Sentinel' control devices (enablers and sensors) as detailed in the schedule or on the drawings.
- ✓ Tool free filter access

Mounting Option

Wall Surface

Airflow Direction

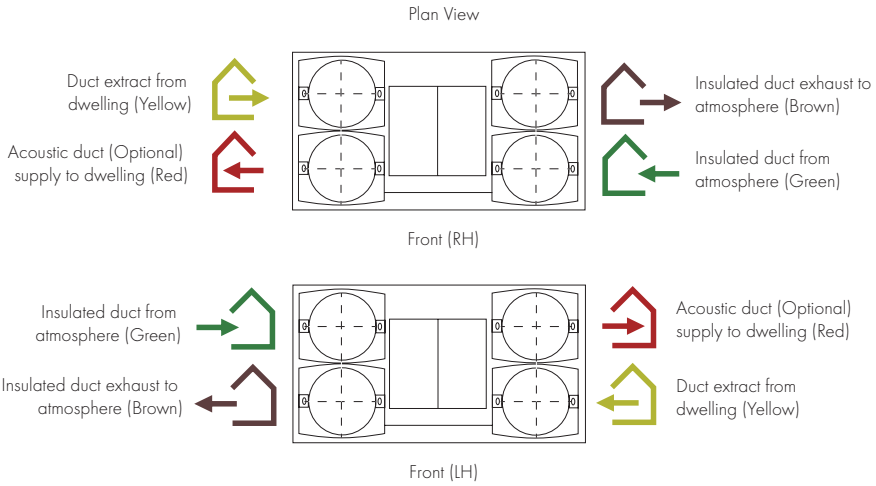

Electrical Connection

Please note: Electrical connection should be carried out by an appropriately qualified person and in accordance with current wiring regulations.

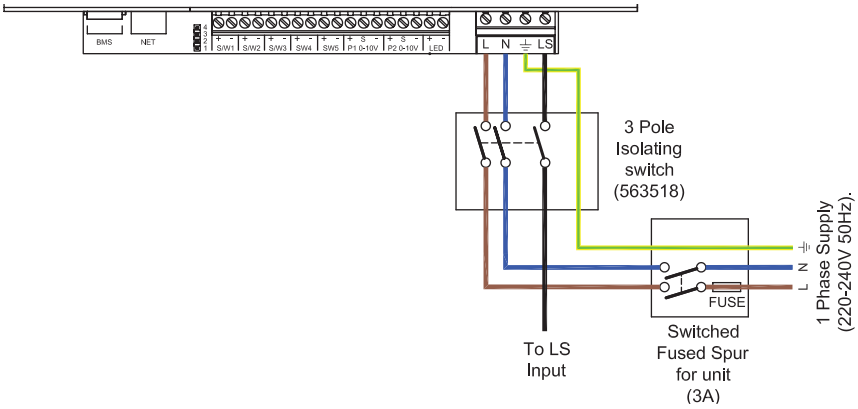

Trickle to Boost by two lighting circuits or Trickle/Boost Switch

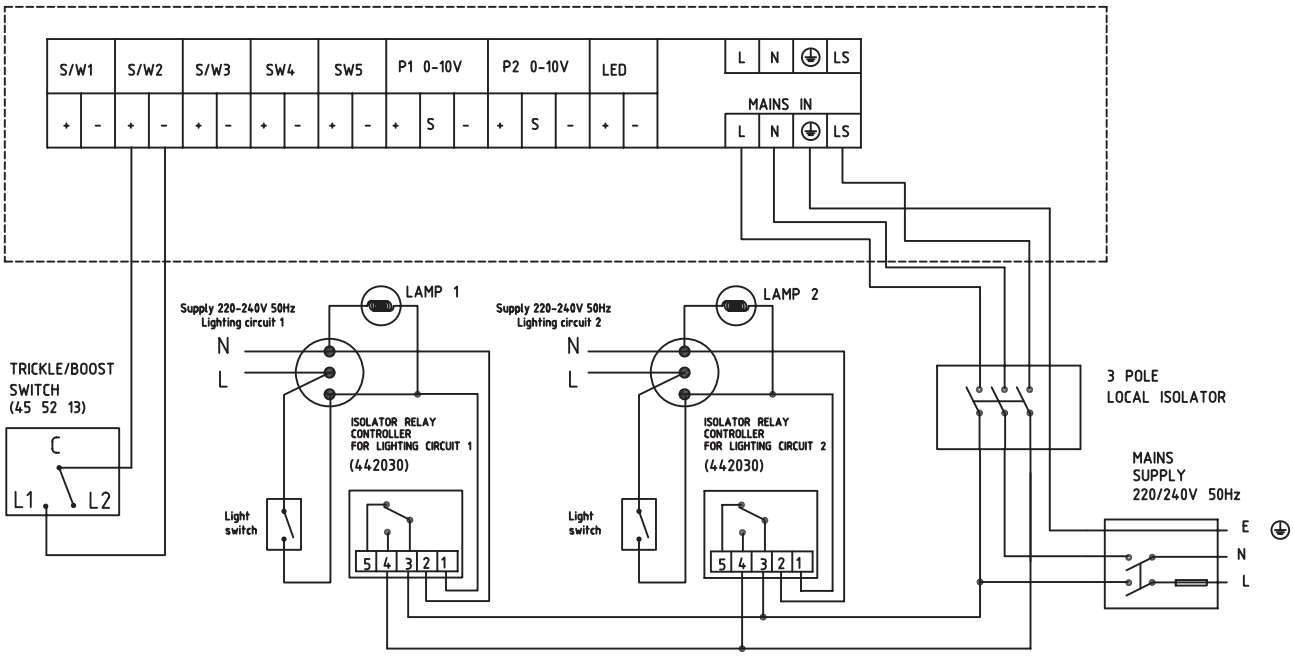

Lo-Carbon Sentinel Kinetic High Flow

- Acoustic Enclosure option for reduced breakout noise
- Acoustic Top Box option for reduced in-duct noise
- Recognised in SAP PCDB
- 180mm/200mm spigots
- Horizontal duct option for space-saving installations
- High airflow, ideal for student accommodation clusters
- Unique folding filter for removal when access is restricted
- Integrated digital controller for simple and accurate commissioning
- Plug and play controls; Humidistat
- BMS connectivity
- LS inputs (Light Switch)
- Volt-free inputs

Increased Performance

The Sentinel Kinetic High Flow benefits from the latest high efficiency, backward curved impeller design, ensuring the lowest possible energy consumption, and an exceptional performance range covering small one bed apartments to the largest of houses.

For scenarios where noise is a critical issue, an Acoustic Enclosure is available to reduce breakout noise and the Acoustic Top Box will reduce in-duct noise at key frequencies.

Care Homes & Student Accommodation

The Sentinel Kinetic High Flow is ideal for larger homes and multiple occupancy units such as care homes and student accommodation. Capable of 175l/s at 150Pa, the unit can extract from up to fourteen bathrooms and a communal kitchen while still achieving almost 90% heat recovery. The fully automatic capability of the Kinetic range means that adequate ventilation is always achieved.

The Kinetic's BMS capability is also ideal for those commercial applications where landlords or property managers want to monitor and optimise building performance and maintenance. The Kinetic BMS can provide status information and its self diagnostics can report if any fault is found.

Spigot Options

180mm/200mm Spigots may be re-positioned to give horizontal connection or a combination of vertical and horizontal connection.

Quick Change Filter

As many systems are placed within cupboards the unique filter design folds as you remove it to ensure easy access in restricted spaces.

Integral Humidity Sensor

The integral humidity sensor increases speed in proportion to relative humidity levels, saving energy and reducing noise. The sensor also reacts to small but rapid increases in humidity, even if the normal trigger threshold is not reached. This unique feature ensures adequate ventilation, even for the smallest wet room. The night time relative humidity setback feature suppresses nuisance tripping as humidity gradually increases with falling temperature.

Models

Model	Stock Ref
Kinetic High Flow Right	408449
Kinetic High Flow Right with Acoustic Top Box & Enclosure	479544
Kinetic High Flow Right with Acoustic Top Box	479543
Kinetic High Flow Right with Acoustic Enclosure	479542
Kinetic High Flow Left	408451
Kinetic High Flow Left with Acoustic Top Box & Enclosure	479547
Kinetic High Flow Left with Acoustic Top Box	479546
Kinetic High Flow Left with Acoustic Enclosure	479545

For further details, see Sentinel Kinetic Plus.

Accessories

Model	Stock Ref
Wired Remote Controller	443283
LED Alarm with 15m cable	448356
Opto-coupler for volt-free bms connection	447340
ISO 45% Coarse (G3) 2x Filter	403702
ISO ePM10 50% Pollen (M5) 1x Filter	444201
Anti Vibration Mounts	68MP033G
Acoustic Purge Fan	477988
Acoustic Purge Fan XL	479829

SAP PCDB Test Results

	SAP 2009		SAP 2012	
	Thermal Efficiency %	SFP (W/l/s)	Thermal Efficiency %	SFP (W/l/s)
K + 1	88	0.65	88	0.58
K + 2	88	0.54	90	0.55
K + 3	90	0.52	91	0.60
K + 4	90	0.55	91	0.69
K + 5	91	0.6	90	0.78
K + 6	91	0.66	90	0.92
K + 7	90	0.74	90	1.09

Performance

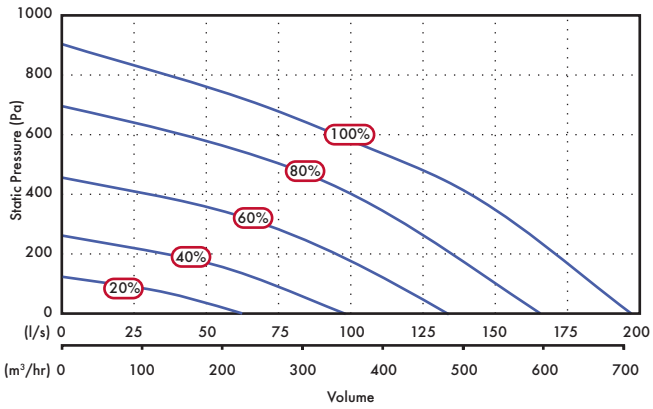

SEC Rating

Model	SEC Class
Kinetic High Flow	A

Dimensions (mm)

Unit

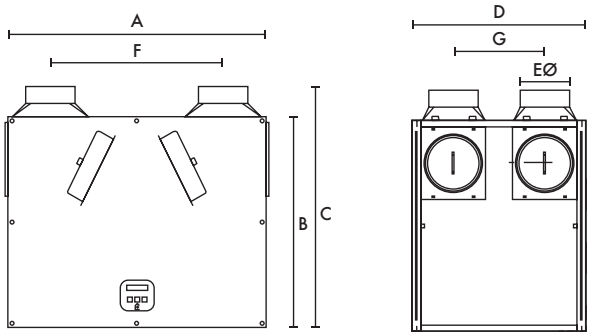

A	B	C	D	EØ	F	G
785	635	722	550	180/200	520	275

Weight: 31kg

Acoustic Solution

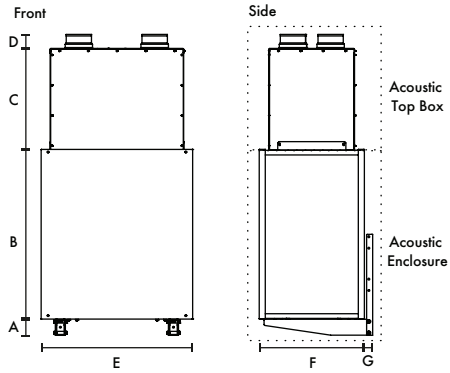

A	B	C	D	E	F	G	Acoustic Top Box kg	Acoustic Enclosure kg	Spigot
80	733	501	71	855	583	40	17	33	180

Sound Data (Unit only)

	Test	Octave band, Hz, dB SWL									SPL dB(A)
Flow %	Mode	63	125	250	500	1K	2K	4K	8K	LwA	@ 3m
20	Supply	55.1	65.9	55.2	53.8	44.4	37.4	25.3	24.9	66.8	34.1
	Extract	58.2	57.4	48.0	45.6	43.8	34.5	20.0	24.5	61.3	27.9
	Breakout	43.3	46.6	44.9	44.7	41.8	30.4	21.6	22.5	51.6	25.1
40	Supply	63.1	69.0	67.1	64.0	55.0	51.6	39.7	32.4	64.2	43.7
	Extract	58.6	58.4	60.0	53.7	41.9	41.5	31.7	25.1	54.9	34.3
	Breakout	55.4	49.6	60.6	53.8	46.5	41.5	33.2	27.4	55.4	34.8
60	Supply	70.3	74.3	81.4	71.5	63.6	59.9	49.6	43.1	74.8	54.3
	Extract	64.4	64.2	72.6	59.1	48.7	45.7	37.8	29.3	64.9	44.4
	Breakout	62.8	54.6	65.7	57.2	55.5	49.2	41.4	36.4	61.0	40.5
80	Supply	75.3	77.9	88.1	78.7	68.4	65.1	56.0	50.1	81.4	60.9
	Extract	71.1	68.2	73.6	61.8	51.9	49.5	42.7	37.6	66.4	45.9
	Breakout	66.2	59.0	73.4	61.8	57.0	54.6	47.3	43.1	66.8	46.2
100	Supply	90.9	80.9	84.4	80.1	71.5	68.0	59.3	54.5	80.7	60.1
	Extract	92.4	71.8	78.1	67.4	54.9	51.5	44.6	41.4	72.2	51.7
	Breakout	69.3	62.9	74.9	67.5	59.2	56.6	49.1	44.7	69.3	48.8

Sound Data (Unit with Acoustic Enclosure)

	Test	Octave band, Hz, dB SWL									SPL dB(A)
Flow %	Mode	63	125	250	500	1K	2K	4K	8K	LwA	@ 3m
20	Supply	55.2	57.0	46.1	38.8	24.0	15.4	18.0	23.2	43.6	26.1
	Extract	50.4	53.6	37.0	32.3	18.2	15.1	18.0	23.2	38.7	21.2
	Breakout	41.3	51.8	39.2	32.3	20.5	15.8	18.1	23.2	37.7	17.2
40	Supply	64.1	59.6	59.7	51.9	35.5	22.8	19.9	23.5	53.3	35.8
	Extract	56.6	50.7	49.0	41.9	24.5	17.7	18.1	23.2	43.3	25.8
	Breakout	46.7	50.5	53.0	44.8	32.2	22.2	18.5	23.3	45.6	25.1
60	Supply	67.3	64.0	67.7	58.6	43.2	30.6	26.5	25.9	61.0	43.5
	Extract	61.6	56.7	55.5	49.0	32.2	25.3	19.7	23.4	50.2	32.7
	Breakout	53.0	54.4	60.2	48.8	40.6	33.2	23.4	23.4	53.0	32.5
80	Supply	70.3	67.7	74.6	61.8	48.5	36.2	33.0	31.4	67.5	50.0
	Extract	66.7	60.0	67.2	50.9	38.1	32.8	24.0	24.1	59.7	42.2
	Breakout	58.0	58.0	64.7	52.4	45.7	39.9	31.2	24.3	58.7	38.2
100	Supply	73.0	70.1	77.1	65.1	51.4	39.5	37.0	36.4	70.1	52.6
	Extract	69.6	62.5	67.3	56.2	41.7	37.0	28.1	25.3	60.5	43.0
	Breakout	61.0	61.2	65.9	57.7	48.5	43.8	36.3	26.3	60.7	40.2

Tested according to BS EN 13141-7:2010. Breakout quoted spherical. Supply and Extract quoted hemispherical.

Consultant's Specification

Operation

The supply and extract ventilation unit shall be as Sentinel Kinetic High Flow as manufactured by Vent-Axia and shall be sized as indicated on the drawings and shall be in accordance with the particular specification.

Supply air to the room shall be pre-heated by the extract air via the integrated composite plastic counterflow heat recovery cell. The Sentinel Kinetic High Flow shall automatically vary the ventilation rate via EC/DC motors, as it receives signals from one of the optional interconnected sensors.

When a signal is received, the fans shall either vary their speed proportionally or on a trickle and boost principle.

The unit shall have the facility to commission the supply and extract fans individually via in-built minimum and maximum speed adjustment, or alternative wired remote control unit. The fans themselves shall have independent, infinitely variable speed control.

Unit Specification

The unit shall be manufactured with an ABS outer case construction, and incorporate a reversible core to allow for left or right hand mounting.

The unit shall have a high efficiency composite plastic counterflow heat exchanger, supply and extract filters, automatic summer bypass, integral minimum and maximum infinitely variable speed controls with facia mounted failure indication.

The unit shall have low energy, high efficiency EC/DC fan/motor assemblies with sealed for life bearings. The impellers shall be high efficiency backward curved centrifugal type.

The unit shall have a heat exchanger cell with a thermal efficiency of up to 92% when tested to EN 308. This shall be protected by ISO 45% Coarse (G3) grade synthetic filters on supply and extract. Complete with a condensate drip tray and drain connection.

To reduce breakout noise, the MVHR unit shall be provided with an Acoustic Enclosure of steel construction lined with class '0' acoustic foam. To reduce in-duct noise, the top of the MVHR shall be fitted with an Acoustic Top Box to provide attenuation to the 4 ducts of the unit. This Acoustic Top Box shall be of steel construction lined with acoustic class '0' foam with the MVHR spigots linked to the Top Box via 4 separate attenuated ducts. The acoustic enclosure and top box shall each be independently tested for noise to BS EN 13141-7.

The unit shall be constructed with a removable Core allowing full maintenance access. The removable Core shall provide access to the following:

- ✓ Supply and extract filter
- ✓ Heat exchanger
- ✓ Access to the electrical connections

Access shall be provided for wiring termination and setup/commissioning. The backlit LCD user interface therein may be duplicated for remote mounting if required.

Units shall be as manufactured by Vent-Axia Ltd.

The MVHR unit shall incorporate an Expanded Polystyrene (EPS) inner chassis with custom motor and impeller mounting features. The inner chassis will assist in reducing noise and act as a large anti-vibration mount to avoid transmission through to the back mounting plate or the base of the unit.

The MVHR unit shall be tested to ensure it meets the maximum allowable vibration of no more than 1mm/s, measured on the unit wall fixing points.

Sound tested to BS EN 13141-7:2010

Standard Controls

All Sentinel Kinetic units shall incorporate the following functions integrally mounted, pre-wired and factory fitted by the manufacturer:

- ✓ Integral infinitely variable fan speed control on supply and extract
- ✓ Integral min/max ventilation control/set point
- ✓ Integral BMS input/output interfaces – control and status indication
- ✓ Heating interlocks
- ✓ 0-10V proportional speed adjustment
- ✓ Volt free contacts
- ✓ 24V sensor supply
- ✓ Integral on/off or trickle boost function from remote switch, e.g. PIR occupancy detector
- ✓ Fully automatic summer bypass
- ✓ Switched Live input with adjustable 'delay-on' feature
- ✓ Fan failure or component failure indicated via individual fault code display
- ✓ Running time counter
- ✓ Control panel PIN number lock
- ✓ Automatic frost protection effective to -20°C
- ✓ The unit shall incorporate an integral humidity sensor with the following features:
  - Ambient Response; Raises the humidity trigger point as dwelling temperature reduces
  - Rapid Response: Monitors the rate of change in humidity and triggers increased airflow even if the humidity trigger threshold is not reached
  - Proportional Response; Incrementally increases the fan speed to reduce noise and reduce energy consumption
- ✓ The unit shall be controlled by the 'Sentinel' control devices (enablers and sensors) as detailed in the schedule or on the drawings.
- ✓ Tool free filter access

Mounting Option

Wall Surface

Airflow Direction

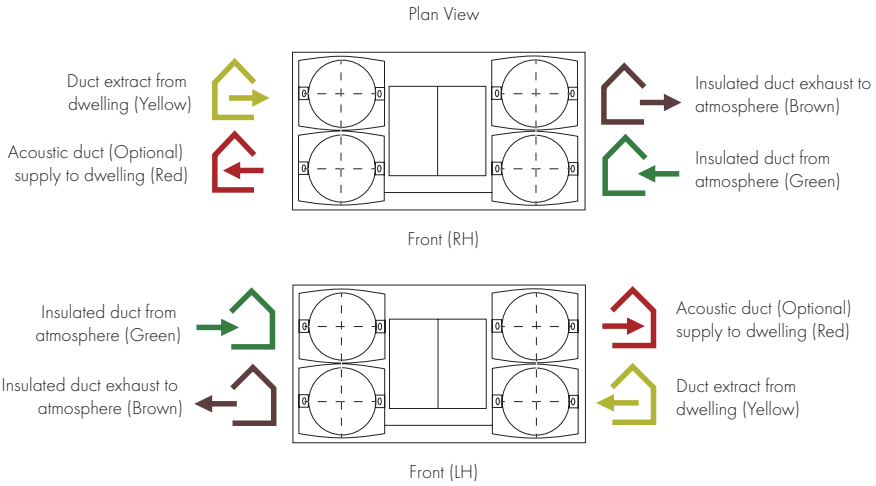

Electrical Connection

Please note: Electrical connection should be carried out by an appropriately qualified person and in accordance with current wiring regulations.

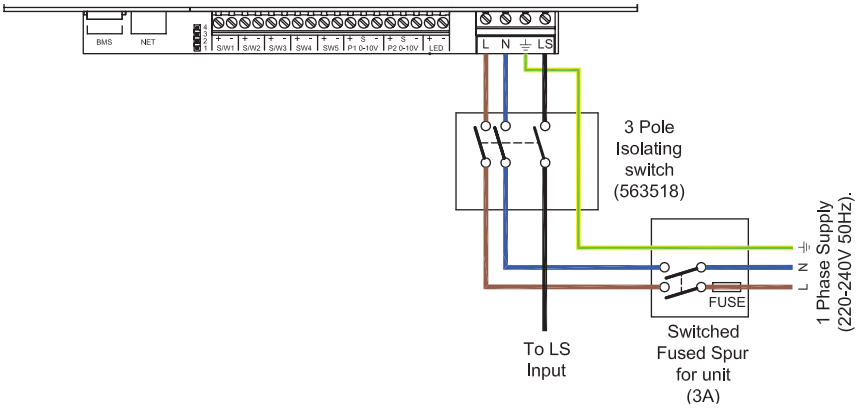

Trickle to Boost by two lighting circuits or Trickle/Boost Switch

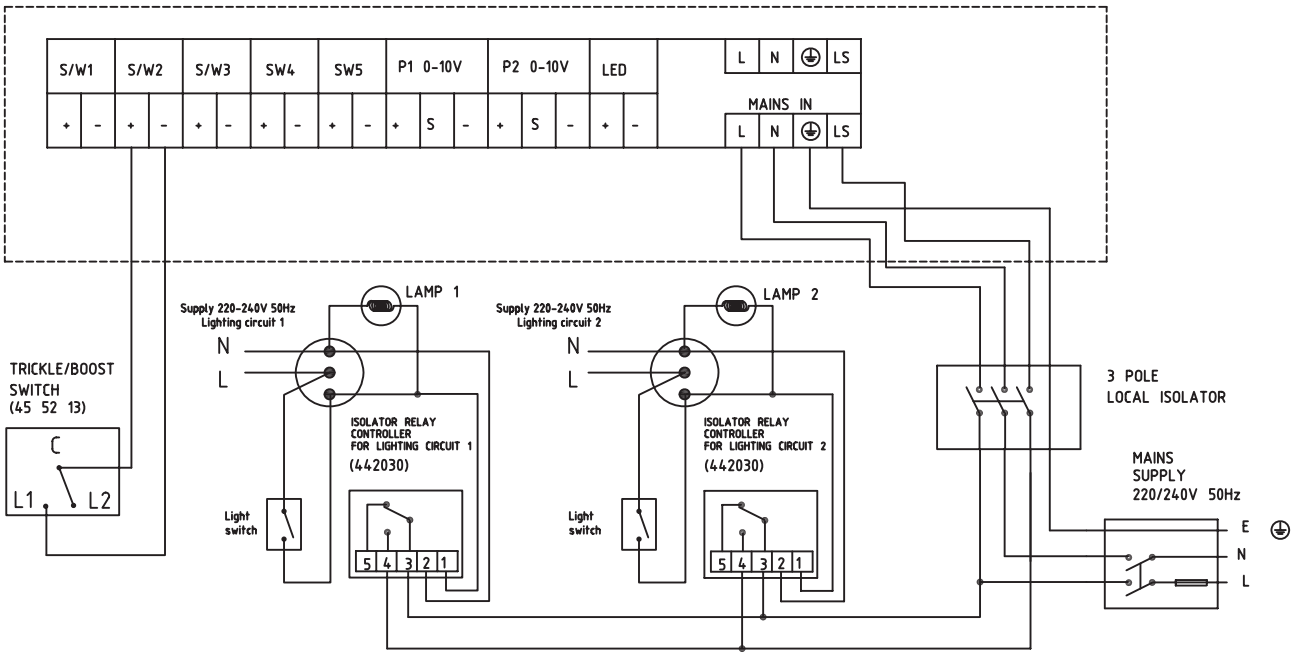

Lo-Carbon Sentinel Kinetic Cooker Hood

- Acoustic Top Box option for reduced in-duct noise
- Recognised in SAP PCDB
- Includes Cooker Hood Canopy
- Horizontal duct option for space-saving installations
- Fits within a 600mm wide aperture (300mm deep)
- Integrated digital controller for simple and accurate commissioning
- Plug and play controls; Humidistat
- BMS connectivity
- LS inputs (Light Switch)
- Volt-free inputs
- Self diagnosis for simplified fault finding
- Adjustable delay On/delay Off timer

housebuilder product awards 2020 winner

Easy Installation

Ducting can be attached to the unit horizontally, vertically or both. Minimum internal depth of kitchen cupboard: 300mm.

Horizontal and Vertical Spigots: The combination of spigot options allows installation in confined locations. If vertical and horizontal connection are required on the same outlet/inlet, additional spigots can be supplied.

The condensate connection can be taken through the rear of the unit or through the side of the unit into an adjacent cupboard prior to connection into pre-installed domestic waste water system.

Cooker Hood Unit

The Sentinel Kinetic Cooker Hood is designed to fit in a 600mm wide aperture above a hob. The telescopic hood incorporates two flat removable metal grease filters, low energy light bulbs and is available with a White or Brushed Aluminium front trim.

The hood contains an integral fire damper in accordance with BRE Digest 398 and is connected to the heat recovery unit by a galvanised steel duct with access for cleaning. When the hood is opened, the heat recovery unit goes to boost speed and the summer bypass automatically opens to prevent cooking by-products entering the heat recovery cell. As an additional safety feature, the duct also contains a thermal cut-out fuse which turns off the MVHR unit in the event of excessive temperature in the airway. Cooker Hood units cannot be handed on-site and must be purchased as left hand (L) or right hand (R) models.

SELV Models

SELV cooker hoods allow the distance between the hood and an electric hob to be reduced from 650mm to 550mm.

Integral Humidity Sensor

The integral humidity (models with H suffix) sensor increases speed in proportion to relative humidity levels, saving energy and reducing noise. The sensor also reacts to small but rapid increases in humidity, even if the normal trigger threshold is not reached. This unique feature ensures adequate ventilation, even for the smallest wet room. The night time relative humidity setback feature suppresses nuisance tripping as humidity gradually increases with falling temperature.

Models

Lo-Carbon Sentinel Kinetic with summer bypass and humidity sensor.

Model	Stock Ref
Kinetic CWH L (White Left)	446756
Kinetic CSH L (Brushed Aluminium Left)	446757
Kinetic CWH R (White Right)	446758
Kinetic CSH R (Brushed Aluminium Right)	446759
Kinetic CWH L SELV (White Left)	477003
Kinetic CSH L SELV (Brushed Aluminium Left)	477004
Kinetic CWH R SELV (White Right)	477005
Kinetic CSH R SELV (Brushed Aluminium Right)	477006

Accessories

Model	Stock Ref
Wired Remote Controller	443283
LED Alarm with 15m cable	448356
Opto-coupler for volt-free bms connection	447340
ISO 45% Coarse (G3) 2x Filter	442356
ISO ePM10 50% Pollen (M5) 1x Filter	444199
Grease 2x Filter	372774
Acoustic Purge Fan	477988
Acoustic Purge Fan XL	479829

SAP PCDB Test Results

	SAP 2009		SAP 2012	
	Thermal Efficiency %	SFP (W/l/s)	Thermal Efficiency %	SFP (W/l/s)
K+1	85	0.72	85	0.78
K+2	85	0.74	85	0.89
K+3	84	0.83	82	1.03
K+4	83	0.92		

SEC Class

Model	SEC Class
Kinetic CWH/CSH	A

Performance

Fan speeds are fully adjustable within the performance range.

Horizontal Spigots

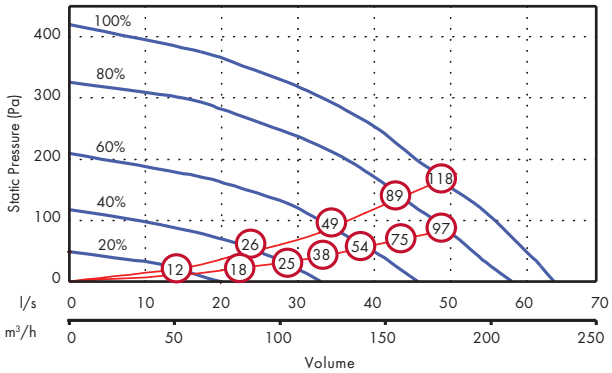

Vertical Spigots

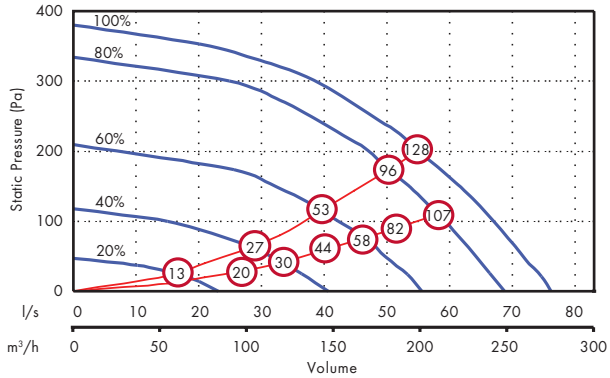

(x) figure relates to Wattage (both motors)

Dimensions (mm)

Unit

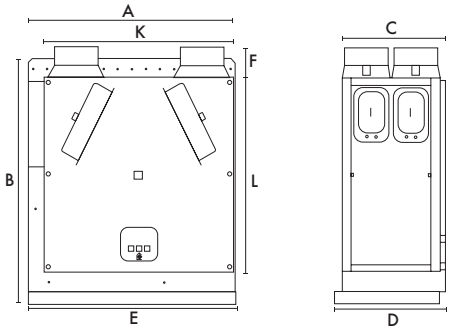

Minimum clearance from the bottom of this unit to the top of the hob must be:
Gas: 750mm
Electric: 650mm/ 550mm
(SELV)

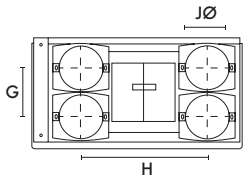

A	B	C	D	E	F	G	H	JØ	K	L	kg
590	710	295	316	598	90	140	360	125	550	550	27

Sound Data

Flow l/s	Test mode	Octave band, Hz, dB SWL 63	125	250	500	1K	2k	4K	8K	SPL dB(A) @ 3m
10	Supply	47.8	40.2	38	31.1	28.2	22.1	23.6	30.9	21.4
	Extract	47	38.7	36	29.9	25	22.4	23.3	30.8	20.6
	Breakout	43.6	36.2	37.4	30.9	27.4	23.3	24.2	31.4	18.6
20	Supply	54	46.6	50.2	44.5	44.4	38.3	28.8	31.9	31.2
	Extract	46.8	40.5	34.6	34.2	34.6	25.9	23.7	30.3	22.9
	Breakout	45.9	39.9	40.6	35.7	33.5	28.4	25.3	31.2	21.3
30	Supply	58.1	54.5	57.6	52.2	51.7	47.6	38.6	35.8	38.5
	Extract	47.6	46.2	38.7	41.3	42.8	33.9	26.4	30.5	28.4
	Breakout	45.2	42.4	48.2	40.8	37.7	35.2	30	31.1	25.2
40	Supply	65.2	58.4	62.3	58	56.5	52.5	44.1	41.4	43.6
	Extract	53.5	53	44	47.7	48.1	39.7	31.5	31.5	33.5
	Breakout	50.9	47.6	47.4	48.1	42.5	40.8	36.3	34.4	29.3
50	Supply	66.4	63.2	66.3	62.5	61.7	57.4	50	47.8	48.3
	Extract	64.2	55.2	48	50.9	52.1	44.5	35.9	35	37.2
	Breakout	55	51	51.3	51.6	46.9	46.0	42	38.3	33.2

Tested according to BS EN 13141-7:2010. Breakout quoted spherical. Supply and Extract quoted hemispherical. For in-duct data, end reflections are added based on the spigot size of the unit.

Consultant's Specification

Operation

The supply and extract ventilation unit shall be a Sentinel Kinetic as manufactured by Vent-Axia and shall be sized as indicated on the drawings and shall be in accordance with the particular specification.

Supply air to the room shall be pre-heated by the extract air via the integrated composite plastic counterflow heat recovery cell. The Sentinel Kinetic shall automatically vary the ventilation rate via EC/DC motors, as it receives signals from one of the optional interconnected sensors. When a signal is received, the fans shall either vary their speed proportionally or on a trickle and boost principle.

The unit shall have the facility to commission the supply and extract fans individually via in-built minimum and maximum speed adjustment, or alternative wired remote control unit. The fans themselves shall have independent, infinitely variable speed control.

Unit Specification

The unit shall be manufactured with an ABS outer case construction, and incorporate a metal duct to the cooker hood, intumescent fire damper and thermal switch, in accordance with BRE Digest 398.

The unit shall have a high efficiency composite plastic counterflow heat exchanger, supply and extract filters, automatic summer bypass, integral minimum and maximum infinitely variable speed controls with facia mounted failure indication. The unit shall have low energy, high efficiency EC/DC fan/motor assemblies with sealed for life bearings. The impellers shall be high efficiency forward curved centrifugal type.

The unit shall have a heat exchanger cell with a thermal efficiency of up to 92% when tested to EN 308. This shall be protected by ISO 45% Coarse (G3) Filter 2pk grade synthetic filters on supply and extract. Complete with a condensate drip tray and drain connection.

The unit shall be constructed with a removable Core allowing full maintenance access. The removable Core shall provide access to the following:

- ✓ Supply and extract filter
- ✓ Heat exchanger
- ✓ Access to the electrical connections

Access shall be provided for wiring termination and setup/commissioning. The backlit LCD user interface therein shall be removable for remote mounting if required.

Units shall be as manufactured by Vent-Axia Ltd.

Sound tested to BS EN 13141-7:2010

Standard Controls

All Sentinel Kinetic units shall incorporate the following functions integrally mounted, pre-wired and factory fitted by the manufacturer:

- ✓ Integral infinitely variable fan speed control on supply and extract
- ✓ Integral min/max ventilation control/set point
- ✓ Integral BMS interfaces – control and status indication
- ✓ Heating interlocks
- ✓ 0-10V proportional speed adjustment
- ✓ Volt free contacts
- ✓ 24V sensor supply
- ✓ Integral on/off or trickle boost function from remote switch e.g. PIR occupancy detector
- ✓ The unit shall be controlled by the 'Sentinel' control devices (enablers and sensors) as detailed in the schedule or on the drawings
- ✓ Fully automatic summer bypass
- ✓ Switched Live input with adjustable 'Delay-On' feature
- ✓ Fan failure or component failure indicated via individual fault code display
- ✓ Running time counter
- ✓ Control panel PIN number lock
- ✓ Automatic frost protection effective to -20°C
- ✓ Tool free filter access
- ✓ The unit shall incorporate ('H' models) an integral humidity sensor with the following features:
  - Ambient Response; Raises the humidity trigger point as dwelling temperature reduces
  - Rapid Response; Monitors the rate of change in humidity and triggers increased airflow even if the humidity trigger threshold is not reached
  - Proportional Response; Incrementally increases the fan speed to reduce noise and reduce energy consumption

Integral Cooker Hood Specification

The Sentinel Kinetic Cooker Hood shall consist of a telescopic Hood and galvanised steel duct connection to the MVHR Unit.

The Hood construction shall be of grey powder coated steel with Brushed Aluminium or White painted fascia.

The Hood shall trigger the MVHR unit to a pre-defined boost speed and open the summer bypass when opened, and shall have two low-energy lamps illuminating the hob top.

Filter shall be a flat metal grease filter, removable for cleaning.

The galvanised steel ductwork shall provide a continuous fire barrier between the Hood and the MVHR unit. It shall contain an Intumescent fire damper, thermal cut-out and volume balancing damper. The thermal cut-out shall switch off the MVHR unit at a pre-defined safety temperature.

The duct shall have an access panel for cleaning by the end-user.

Mounting Option

Wall

Airflow Direction

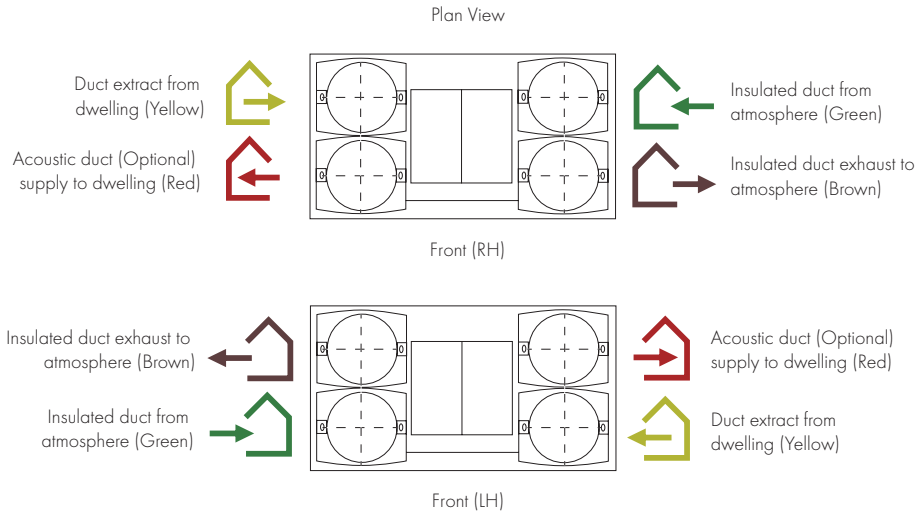

Electrical Connection

Please note: Electrical connection should be carried out by an appropriately qualified person and in accordance with current wiring regulations.

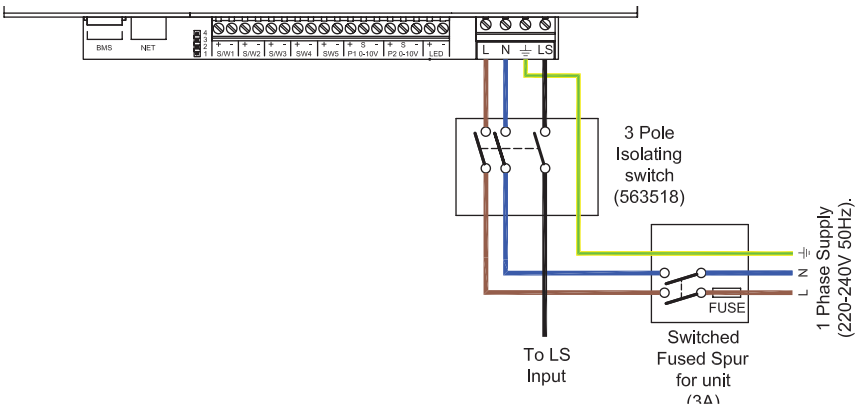

Trickle to Boost by a Light Circuit

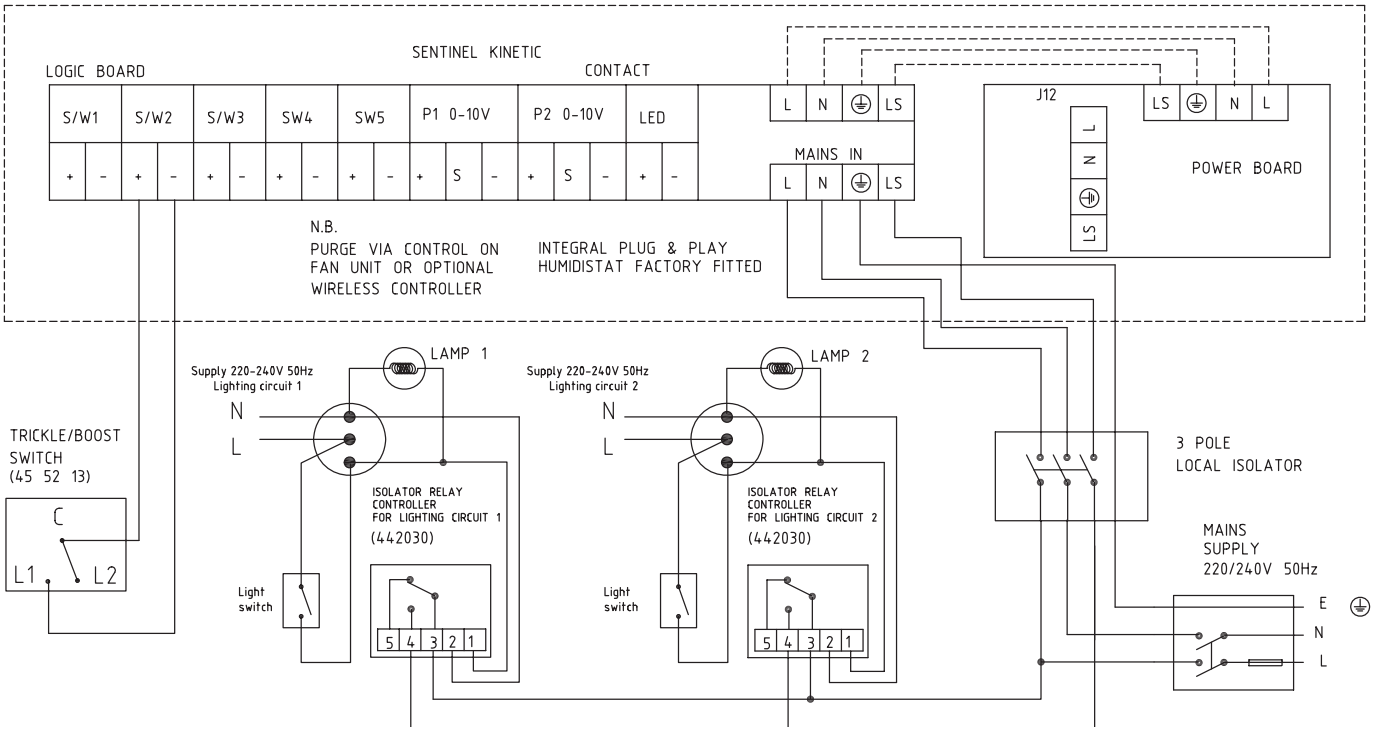

Lo-Carbon Sentinel Kinetic Horizontal

- Manufactured in the UK
- Building Regulations ADF compliant
- Recognised in SAP PCDB
- Energy Savings Trust best practice compliant
- Up to 81% heat recovery whilst controlling condensation
- Programmable Summer bypass
- Digital controller for simple and accurate commissioning
- External condensate connection
- Plug and play controls; Humidistat
- LS inputs (Light Switch)
- Volt-free inputs
- Self diagnosis for simplified fault finding
- Adjustable delay On/delay Off timer

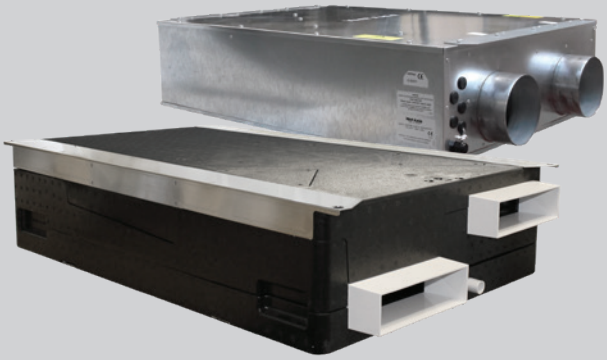

The Sentinel Kinetic Horizontal Range

A wholehouse heat recovery system with up to 81% heat exchange efficiency. An easily accessible heat recovery cube protected by two removable ISO 45% Coarse (G3) Filter 2pk. Two Lo-Carbon Energy Saving EC/DC fans ensure long life (typically over double the life of AC motors) and lowest possible energy use. Fully insulated construction with built-in condensation drain. Specifically designed for new build constructions with a high level of insulation.

Lo-Carbon Sentinel Kinetic Horizontal meets the latest requirements of the Building Regulations ADF for wholehouse system ventilation: Continuous mechanical supply and extract with heat recovery. Each model has three fully adjustable speeds and a purge setting (maximum flow). Supplied with the unit is a digital controller that can be used to pre-set the speeds to any required airflow within the performance range.

Integral Humidity Sensor

The integral humidity sensor ('H' models) increases speed in proportion to relative humidity levels, saving energy and reducing noise. The sensor also reacts to small but rapid increases in humidity, even if the normal trigger threshold is not reached. This unique feature ensures adequate ventilation, even for the smallest wet room. The night time relative humidity setback feature suppresses nuisance tripping as humidity gradually increases with falling temperature. Acoustically lined - low noise levels from only 20dB(A) @ 3m.

Models

Model	Stock Ref
Kinetic 200ZPH	407162
Kinetic 200ZH	449540
Kinetic 200ZMH	448778
Kinetic 300ZH	449536

Accessories

Model	Stock Ref
200ZPH 45% Coarse (G3) 2x Filter	407584
200ZH/ZMH 45% Coarse (G3) 2x Filter	449524
200ZH/ZMH ePM10 50% Pollen (M5) 1x Filter	404574
300ZH 45% Coarse (G3) 2x Filter	449575
300ZH ePM10 50% Pollen (M5) 1x Filter	404575
Acoustic Purge Fan	477988
Acoustic Purge Fan XL	479829

Multiple Control Options:

Five Volt-free pairs of switch terminals for sensor inputs allow boosting from a full range of Vent-Axia controllers – humidistats, PIR, timers.

Two terminals with 0-24V outputs allow 0V to 10V proportional control by sophisticated controllers such as CO_2 sensors and proportional humidistats.

Switch-live for boosting via light switches (220-240V AC) or manual Normal/Boost switches. This connection has the advantage of Delay-On and Delay-Off facility. Delay-On enables you to prevent the Boost airflow between 0 and 10 minutes after a light switch has been activated. Delay-Off allows the Boost airflow to continue after a light switch is turned off to ensure effective clearance of humidity. This timer is adjustable between 0 and 25 minutes.

Summer Bypass

An internal damper operates when the external temperature is below the internal temperature, and the internal temperature is too high.

The bypass opens and allows the cooler outside air to help cool the dwelling.

Normal mode: Fans run on Normal speed with bypass open until the internal dwelling temperature falls below the set 'Indoor' (maximum desired) temperature.

Evening Purge mode: The fans run on Boost speed until the internal temperature falls below the set 'Indoor' temperature. If, after five hours the internal temperature is still above the set 'Indoor' temperature, the unit will switch down to normal speed for the remainder of the 'bypass open' period.

Night-time Purge mode: As Evening Purge, except that the unit will continue on Boost speed until the internal air temperature reaches the 'Outdoor' temperature set point (Default 14°C). This mode gives pre-cooling of the dwelling for the following day.

In Evening and Night Time Purge modes, the user can turn off the boost function by pressing the Boost button.

Frost Protection

In cold climates there is a possibility of frost building up on the intake side of the heat exchanger. In order to prevent damage, the Kinetic reduces supply flow while maintaining extract flow at temperatures down to -20°C.

SEC Class

Model	SEC Class
Kinetic 200ZH/ZPH/ZMH	A
Kinetic 300ZH	A

SAP PCDB Test Results

	SAP 2009		SAP 2012	
200ZPH	Thermal Efficiency %	SFP (W/l/s)	Thermal Efficiency %	SFP (W/l/s)
K+1	86	0.62	84	0.67
K+2	84	0.65	82	0.82
K+3	83	0.76	80	1.07

	SAP 2009		SAP 2012	
200ZH/ZMH	Thermal Efficiency %	SFP (W/l/s)	Thermal Efficiency %	SFP (W/l/s)
K+1	80	0.69	81	0.73
K+2	81	0.70	81	0.89
K+3	80	0.80	79	1.12
K+4	80	0.97	78	1.39
K+5	79	1.14		

	SAP 2009		SAP 2012	
300ZH	Thermal Efficiency %	SFP (W/l/s)	Thermal Efficiency %	SFP (W/l/s)
K+1	77	0.59	78	0.54
K+2	78	0.51	78	0.61
K+3	78	0.57	78	0.75
K+4	78	0.66	78	0.93
K+5	78	0.76	77	1.13
K+6	78	0.88	76	1.35
K+7	77	1.05		

Dimensions (mm)

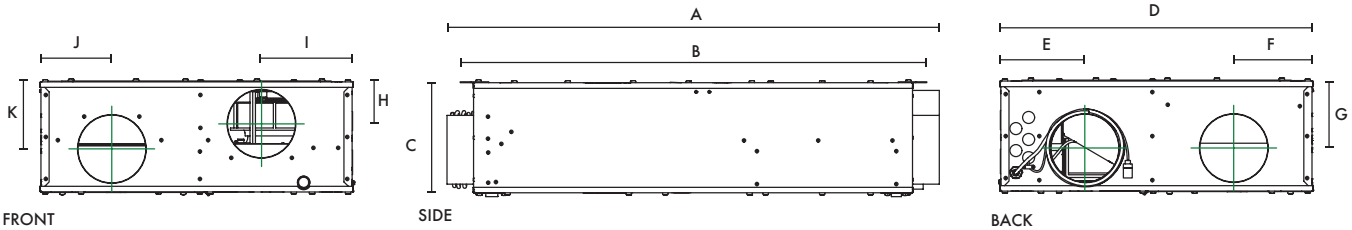

Model	A	B	C	D	E	F	G	H	I	J	K	Spigots Ø
200ZH	895	849	200	570	155	144	122	76	167	131	122	125
300ZH	985	940	301	720	184	179	187	102	279	174	187	150
Weight: 200ZH - 26kg, 300ZH - 38kg												

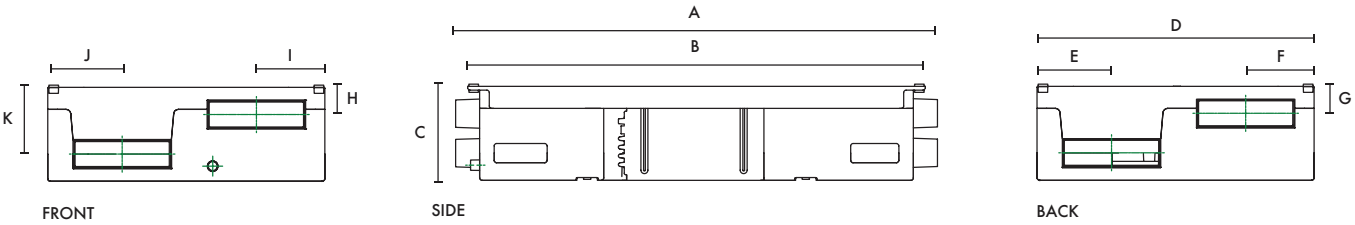

Model	A	B	C	D	E	F	G	H	I	J	K	Spigots
200ZPH	1000	950	200	575	155	142	60	61	142	154	143	204x60
200ZMH*	895	849	200	570	195	140	54	66	168	138	143	204x60
Weight: 200ZPH - 14kg, 200ZMH - 26kg												

*Galvanized steel outer case construction

Performance - 200ZH/ZMH/ZPH Model

Fan speeds are fully adjustable within the performance range.

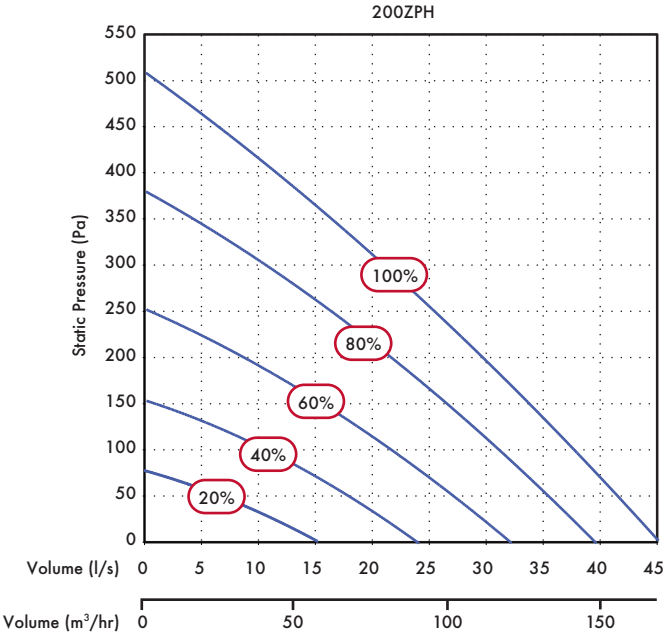

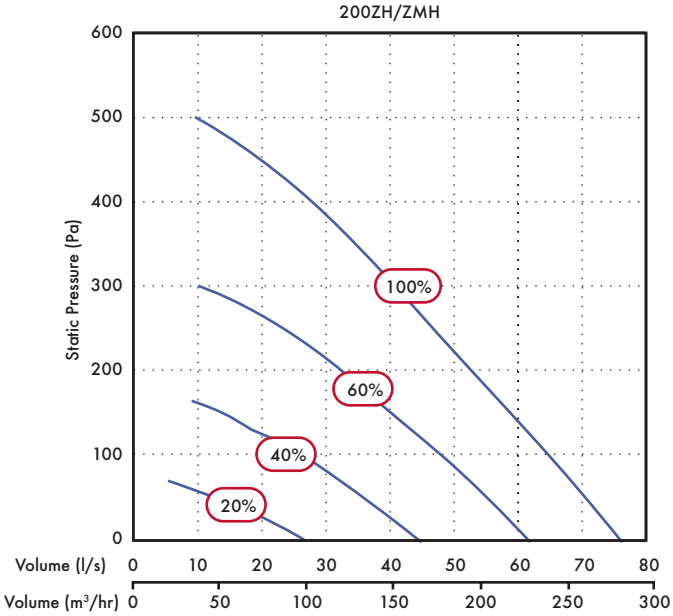

Sound Data - 200ZPH Model

Speed	Test mode	63	125	250	500	1k	2k	4k	8k	dB(A) at 3m
20%	Breakout	48.3	41.3	37.7	35.8	34.5	28.2	26	31.2	21.5
	Supply	39.6	37.1	36	32.9	30.6	22.9	24.9	29.4	23.1
	Extract	49.4	40.7	35	30.4	26.3	22.5	23.6	30.1	20.8
40%	Breakout	47.8	42.2	46.7	40.6	40.2	34.2	28.1	31.2	25.3
	Supply	45.7	38.3	40.7	39	38.1	28.7	24.9	28.5	28.1
	Extract	50	45.5	39.9	37	34.3	28.6	25.1	30.6	24.3
60%	Breakout	54.4	51.2	53.8	46.2	43	38.9	33.8	32	29.7
	Supply	46.1	49.2	45.3	44.4	42.4	35.2	27	29.3	32.7
	Extract	49.5	41.9	45.4	41.7	39.4	35.2	27.6	30.3	27.7
80%	Breakout	50.4	51.2	56.7	53.9	48.5	43.2	39.9	34.9	34.5
	Supply	52.9	48.9	47.5	51.3	47.2	40.8	31.2	30	36.8
	Extract	48.9	43.3	46.8	50	42.4	38.6	31.3	30.1	32.2
100%	Breakout	49.3	49.8	52.9	54	51	46.3	41.2	35.7	35.1
	Supply	43.8	45.8	50.7	56.3	50	44.3	35.7	29.7	38.2
	Extract	53.2	46.9	48	52.8	45.4	42.1	35.1	30.5	34.9

Sound Data - 200ZH/ZMH Model

Flow %	Test mode	63	125	250	500	1k	2k	4k	8k	dB(A) at 3m
20	Supply	50.3	54	50.1	45.5	37	36	27.5	31.1	30.0
	Extract	47.2	47.7	46.6	41.8	30.7	27.9	24.6	30.5	26.3
	Breakout	48.8	55.8	51.2	43.8	32.4	29.0	25.4	30.8	26.8
40	Supply	52.7	61.7	60.1	61.8	47.4	45.1	38.1	40.1	42.7
	Extract	50.7	55.4	55.0	51.5	37.5	34.6	25.9	30.7	33.9
	Breakout	53.7	60.1	61.1	50.7	40.2	35.8	27.1	30.3	34.0
60	Supply	52.8	64.5	66.7	59.4	51.1	51.1	42.9	39.3	44.0
	Extract	50.6	59.0	62.1	57.1	43.7	40.0	29.0	31.6	39.7
	Breakout	55.1	64.4	66.8	57.5	47.0	41.4	32.0	32.0	39.7
100	Supply	58.3	69.2	68.6	64.6	56.9	56.1	47.9	45.6	48.1
	Extract	51.8	63.1	64.9	63.9	52.4	45.9	34.8	34.8	45.2
	Breakout	59.4	68.1	69.7	68.3	53.1	47.1	36.5	34.3	46.5

Tested according to BS 848. Breakout quoted spherical. Supply and extract quoted hemispherical.

Performance - 300ZH Model

Fan speeds are fully adjustable within the performance range.

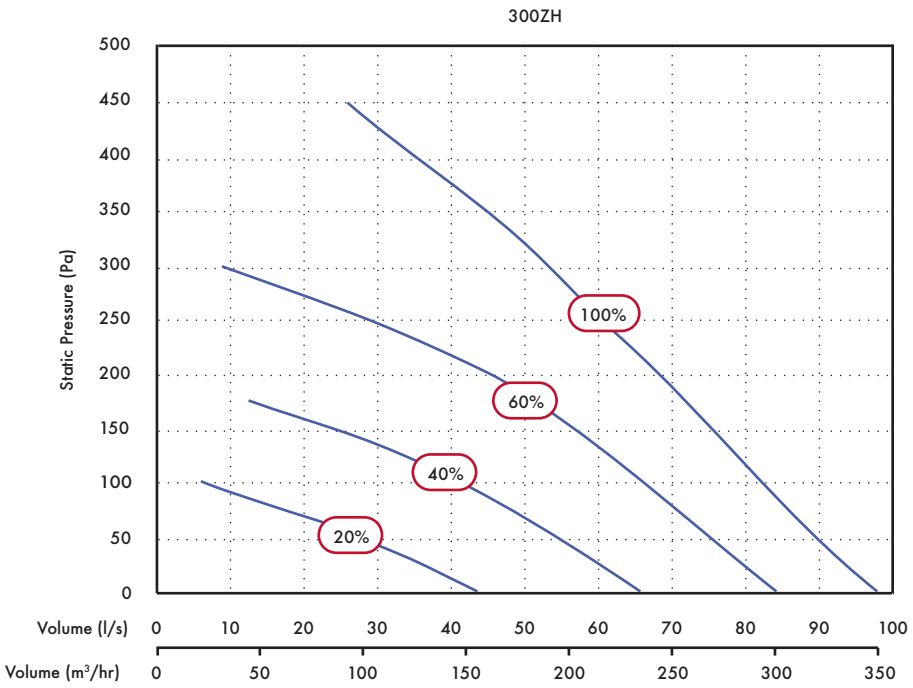

Sound Data - 300ZH Model

Flow l/s	Flow %	Test mode	63	125	250	500	1k	2k	4k	8k	dB(A) at 3m
26	10	Supply	42.5	42.8	38.3	32.9	28	24.6	25.5	30.3	26.3
		Extract	46.9	45	40.3	34.4	27.4	23	24.3	30.1	22.5
		Breakout	48.7	52.1	47.7	40.5	32.9	27.3	25.1	31.6	24.4
44	20	Supply	45.6	47	41.7	35.7	31.7	26.7	24.8	30	29.9
		Extract	46.9	48.6	47	38.2	29.5	25.3	23.8	29.9	25.3
		Breakout	50.2	56.4	53.9	46.3	37.5	32.5	25.2	31.4	28.8
55	30	Supply	44.4	46	52.9	39.4	35.1	31.9	25.5	30.5	33.9
		Extract	47	48	55.5	42.5	32.2	29.9	25.7	30.6	30.6
		Breakout	52.2	59.6	62	51.4	41.9	37.4	28.1	31.4	34.7
66	40	Supply	43.1	44.4	54.3	43.5	39.2	35.7	27.7	29.9	35.0
		Extract	48.9	49	58.4	45.9	35.7	33.4	25.3	29.9	33.4
		Breakout	54.6	58.3	66.1	52.6	39.3	36.5	31.1	35.3	37.7
85	60	Supply	44.7	49.8	58	50.4	45	41.9	30.6	30.3	39.1
		Extract	51	53.6	61.2	50.1	41.6	40.1	30.7	31.1	36.7
		Breakout	57.5	62.6	68.7	57.5	45.9	41	36.3	34	40.7
96	80	Supply	46	52.2	57.1	56.5	47.2	44.2	32.3	30.5	40.5
		Extract	55.5	55	63.1	53.4	44.3	41	33.5	31.4	38.8
		Breakout	62.2	65.7	68.8	63	50.8	43.8	38.8	35.4	42.9
98	100	Supply	46.6	52.3	57	55.4	47.1	43.7	32.1	30.3	40.1
		Extract	53.7	55.2	63.3	53.3	44.1	41.2	33.2	31.5	38.9
		Breakout	62.2	73.8	77.4	74.1	67.4	61	53.6	45.4	53.9

Tested according to BS848. Breakout quoted spherical. Supply and Extract quoted hemispherical.

HR100R/RS

- Controls condensation and odours
- Eliminates mould growth
- Up to 70% heat recovery - saves energy
- Extremely quiet operation
- Two speed settings
- ERP exempt (<30W)

The HR100R and HR100RS are ideal for single bedrooms/bathroom applications situated in hotel rooms, nursing homes and residential care homes.

The HR100R features top access making it ideal for loft installations.

The HR100RS features bottom access for installation on the slab above a suspended ceiling.

The HR100R/RS is a self-contained heat recovery unit for mounting in lofts and suspended ceilings. The unit is supplied without controls to allow for the unit to be tailored to suit the individual requirements.

Compatible with standard 100mm ducting for connection to internal grilles and external cowl.

The unit comes fitted with a single 2-speed motor, and provides continuous low volume ventilation with a boost option. A variety of control devices are available for manual or automatic speed control.

An integral heat exchanger transfers heat from the outgoing stale air to the fresh air supply, raising the supply air temperature whilst at the same time reducing its relative humidity.

Up to 18l/s FID capacity. The unit provides superior control of condensation and odours, ideal for bathrooms or small internal rooms.

Models

HR100R
Top access - ideal in loft installations.

Model	Stock Ref
HR100R	370377

HR100RS
Bottom access - ideal for suspended ceilings.

Model	Stock Ref
HR100RS	435004

Controllers

Normal Boost Switch
A single gang switch to boost from high to low speeds on all heat recovery systems.
85 x 85 x 10mm (H x W x D)

Model	Stock Ref
Normal Boost Switch	455213

HR100RS Version

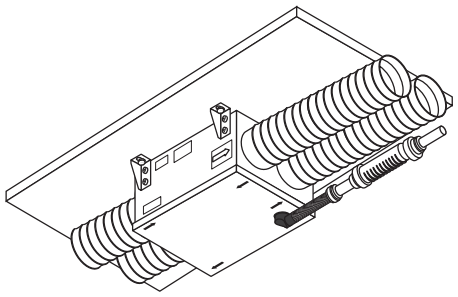

Dimensions (mm)

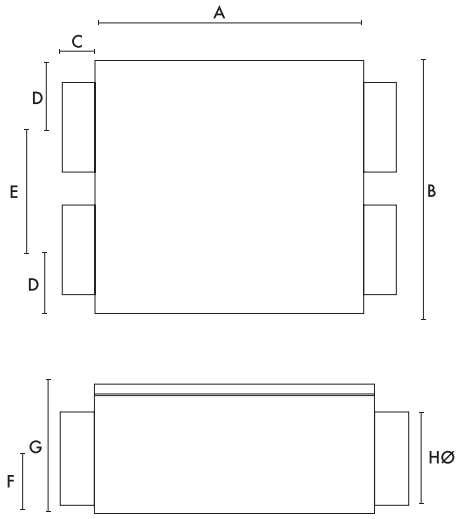

A	B	C	D	E	F	G	HØ
305	240	50	60	120	70	160	98

Performance

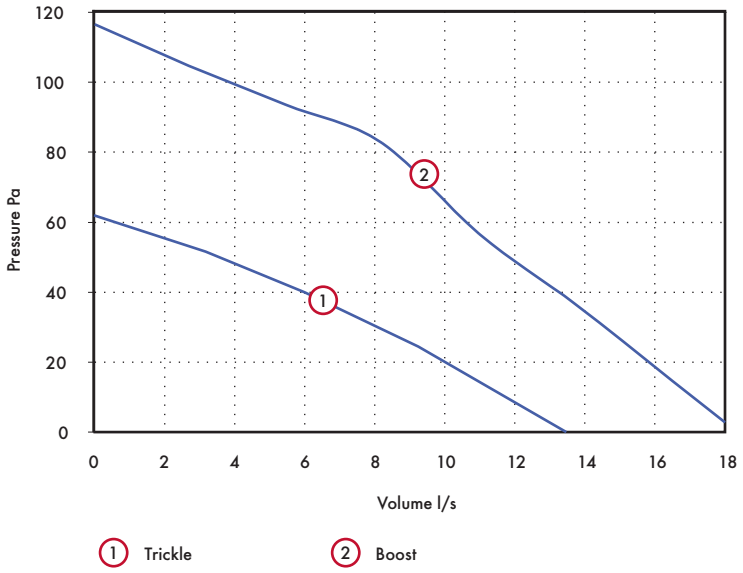

	Weight	Extract Perf. l/s		Watts		dB(A) @ 3m*	
Model	kg	Boost	Trickle	Boost	Trickle	Boost	Trickle
HR100R	5.6	18.3	13.6	29	19	30	20
HR100RS	5.6	18.3	13.6	29	19	30	20
Mains electrical supply: 230V/50Hz							

Integra

- Heat recovery unit for smaller residential or commercial applications up to 180m^2
- Up to 70% heat recovery
- Low power consumption
- Effective condensation control
- Summer mode

The Integra heat recovery unit has been specially designed to provide ventilation for flats or rooms in residential, commercial, educational or leisure applications. Balanced ventilation is achieved by using nominal 100mm diameter rigid ducting.

Using a high performance, polymeric heat exchange cube, together with two powerful fans, the Vent-Axia Integra achieves efficiencies of up to 70%.

The compact cube interleaves outgoing moist air with incoming fresh air, allowing the heat from one to warm the other without the two air streams mixing. Energy is saved on room heating, with no power being used by the cube itself.

Performance of Integra: Up to 49l/s FID. Ideal for installation in ceilings voids or cupboards.

The 150VA Transformer enables the selection of trickle settings to match dwelling volume.

Models

Model	Stock Ref
Integra	456864

Controller

Model	Stock Ref
Controller 150VA	563538

Airflow Direction

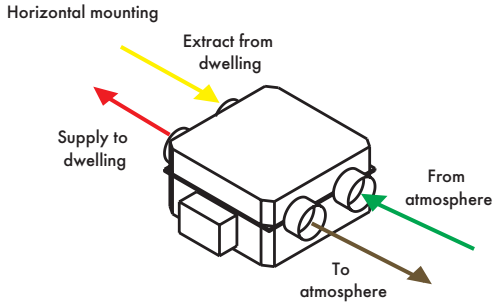

SEC Class

Model	SEC Class	SEC Class (inc. LDC)
Integra	F	C

Dimensions (mm)

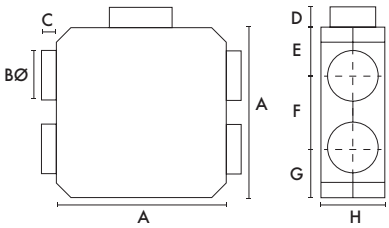

A	BØ	C	D	E	F	G	H
400	98	50	65	85	230	85	210

Weight: 6.5kg

Performance

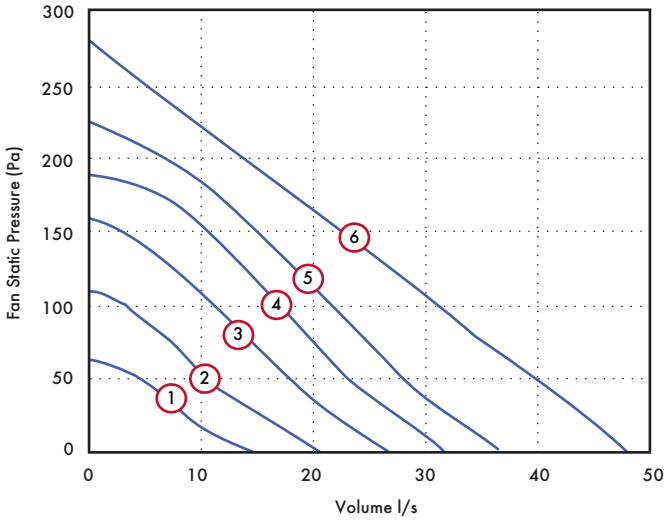

Motor Speed/Curve	Volume (l/s) (FID)	Voltage (V)	Wattage (W)
1	15	80	32
2	21	100	47
3	27	120	64
4	32	140	81
5	37	160	99
6	49	240	182

Integra to be used with a 150VA Transformer for maximum controllability.

Integra Plus EC

- Heat recovery unit for larger residential or commercial applications
- Up to 70% heat recovery
- Low power consumption
- Effective condensation control
- 3 speed control
- Summer mode
- EC motors

Easy Installation

The Vent-Axia Integra Plus EC is designed for mounting in ceiling voids, lofts and above a suspended ceiling. Four 150mm spigots are provided for simple connection to insulated flexible or rigid ventilation ducting. The unit comes complete with a 22mm condensate outlet.

The Integra Plus EC incorporates two adjustable speeds and a Purge setting (full Speed).

Switching on the controller allows activation of the Summer Mode.

Model

Model	Stock Ref
Integra Plus EC	437666EC

SEC Class

Model	SEC Class	SEC Class (inc. LDC)
Integra Plus EC	B	A

Airflow Direction

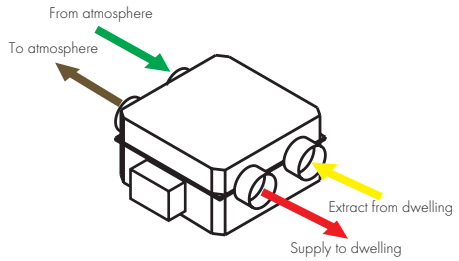

Controllers & Sensors

Model	Stock Ref
Ambient Response Humidistat	563550
Visionex PIR	459623
TIM2	370346

Dimensions (mm)

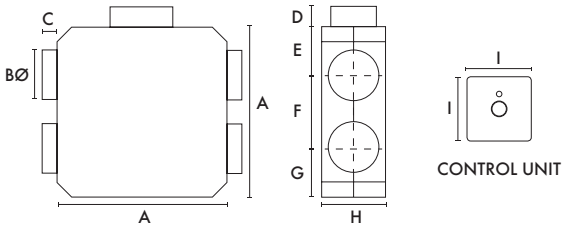

A	ØB	C	D	E	F	G	H	I
580	150	100	64	125	350	125	305	85

Weight: 17kg fan box

Performance

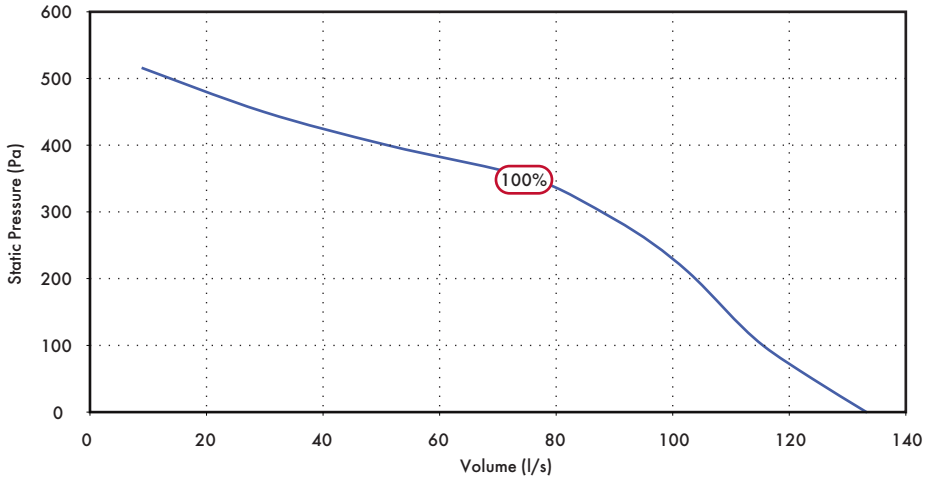

Sound Data

Flow, l/s	Unit setting V	Test mode	Octave band, Hz, dB SWL 63	125	250	500	1k	2k	4k	8k	SPL dB(A) at 3m
55	4	Supply	39.2	43.1	44.5	47.1	42.6	36.0	29.3	30.7	30.7
		Extract	47.0	42.4	38.6	40.4	35.5	28.0	27.9	32.6	25.3
		Breakout	43.2	42.7	38.2	37.6	33.4	28.4	27.6	31.5	21.7
69	5	Supply	42.0	47.6	46.1	49.9	48.8	41.2	33.7	32.5	34.4
		Extract	47.8	42.2	41.4	43.2	40.4	29.6	27.7	32.5	27.7
		Breakout	45.2	45.7	41.9	40.7	37.3	30.5	27.5	32.4	23.8
79	6	Supply	46.0	49.7	50.6	54.0	54.4	45.9	39.6	36.9	38.7
		Extract	44.5	43.2	44.8	46.4	46.2	32.2	28.4	32.3	31.4
		Breakout	46.2	47.2	44.3	43.4	43.1	32.8	28.5	32.2	26.6
81	6.6	Supply	47.0	52.5	53.8	56.4	58.3	48.8	42.8	40.8	41.8
		Extract	50.3	45.3	47.7	48.5	47.4	35.0	30.7	32.9	33.0
		Breakout	45.5	47.9	45.5	45.5	45.5	34.0	29.2	31.5	28.3
95	7	Supply	48.9	54.1	56.3	58.0	59.2	51.0	45.9	43.8	43.3
		Extract	47.6	46.5	49.4	49.7	48.3	37.0	31.1	32.3	34.0
		Breakout	49.0	49.5	48.2	47.5	47.3	36.7	31.1	32.3	30.1
109	8	Supply	51.0	58.2	57.4	60.1	61.2	54.4	48.9	48.0	45.6
		Extract	56.2	52.4	51.7	53.1	49.6	39.5	33.8	33.2	36.3
		Breakout	51.8	53.9	51.3	50.7	48.7	40.3	34.0	32.5	32.2
113	9	Supply	49.1	56.1	59.4	62.8	63.3	57.2	52.1	50.8	47.4
		Extract	54.5	50.9	52.4	54.5	51.4	42.3	35.3	33.8	37.8
		Breakout	53.6	54.3	52.8	52.3	50.8	43.4	36.2	33.5	34.1

Tested according to BS848. Breakout quoted spherical. Supply and Extract quoted hemispherical.

Sentinel Apex HR06

- Very low sound levels independently tested and verified by SRL
- Low SFP utilising IE 5 equivalent motors
- High Heat Recovery Efficiency – up to 93% (EN308)
- Automatic summer bypass sized to eliminate performance loss
- ePM10 50% and ePM1 55% filters as standard (M5 / F7 equivalent)
- Filter access from bottom and side as standard
- Digital on board controller and remote room controller as standard
- App connectivity as standard
- Wired and Wireless communication sensors available
- Integral condensate tray and pump
- Electric frost protection heater as standard

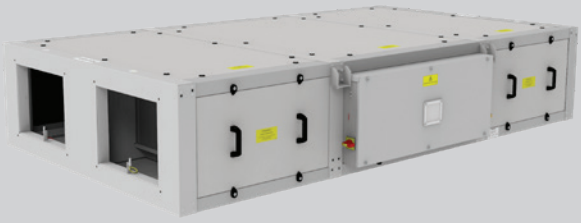

Performance simply delivered with more as standard

Vent-Axia's Sentinel Apex range of commercial heat recovery units with up to 93% EN308 heat recovery efficiency, low sound levels and low specific fan powers the range provides high levels of performance efficiently. A new advanced control system that provides on board control, in room control and App based control full functionality commissioning and monitoring is simply provided. This control can be coupled with Vent-Axia's new range of sensors with wired or wireless communication providing close control of, and monitoring of your indoor air quality. Sensors include CO_2, humidity and temperature and provide both proportional and switch control.

The Sentinel Apex HR06 unit is manufactured with a double skinned pentapost construction incorporating aluzinc frames and panels. The panels are acoustically and thermally treated with 90kg/m^3 high efficiency acoustic and thermally insulating foam (fire retardant to BS476 Part 7 Class 1 & Part 6 Class O). The construction of the unit, IPX4, allows for internal and external mounting as standard, however, the roof assembly should be included for full external locations.

The housing is designed to be as compact as possible for concealed false ceiling applications with top and bottom access panels for maintenance. Access panels are sized to enable single person maintenance.

The fans utilised in the Sentinel Apex HR06 are the latest EC/DC external rotor motors specifically chosen for their low power consumption and low noise characteristics. The assembly is dynamically balanced to DIN ISO 1940 Grade 6.3. Ball bearings are greased for life. Insulation is Class 'B' (from -25°C to +60°C). All models incorporate internal electronic overload protection and a soft start function.

The Sentinel Apex HR06 is complete as standard with ISO ePM10 50% (M5) extract filter and ISO ePM1 55% (F7) supply, complete with a filter change warning. Filters have been selected to fully comply with the requirements of ISO16890 whilst having low pressure loss characteristics.

An integral electric frost heater is included to provide frost protection of the cell and filters down to -10°C. The integral controls also allow this heater to be utilised as a top up heater.

The unit is complete with an integral summer bypass facility which has been designed to provide full bypass without impact to the airflow or power consumption of the unit whilst in bypass mode.

Airflow and power consumption tested in accordance with BS EN 5801. Sound data derived from independent testing at Sound Research Laboratories in accordance with EN ISO 3741:2010. Published dB(A) figures are free field sound pressure levels at 3m with spherical propagation at a reference level of 2 x 10^{-5} Pa. The inlet/outlet sound power level spectra figures are dB with a reference of 10^{-12} watts.

An integral condensate tray is fitted along with an internal quiet running high quality pump allowing for removal of the condensate via a 10mm condensate pipe.

To facilitate normal access and maintenance to the unit there are both side and bottom access panels as standard. Should it be required, all panels are removable allowing access and removal of the heat recovery cell and all other components. A lockable isolator is fitted to the control panel preventing accidental operation whilst any maintenance is being carried out.

The electrical supply for the unit is 230V +/- 10% / 50/60Hz / 1ph. A 24V DC power is available from the unit for powering any of the matched sensors and switches.

The Sentinel Apex HR06 unit is fitted with an integrated control system as standard with a purpose designed user interface controller incorporating an alphanumerical 2 line display with 4 button keypad for fan status and a basic commissioning setup mounted within the control panel. A remote HMI is also included for that can be mounted within the room that is being ventilated. This allows for local monitoring of the unit along with the commissioning set-up.

App based control is also available via the Vent-Axia Connect App. This provides detailed commissioning and monitoring information and the ability to control the unit remotely.

A full range of sensors is available including humidity, temperature and CO_2 monitoring. These sensors are available for both wired and wireless communication with the wireless sensors being either local mains or battery powered.

Model	Stock Ref
Sentinel Apex HR06	HR06X

Dimensions (mm)

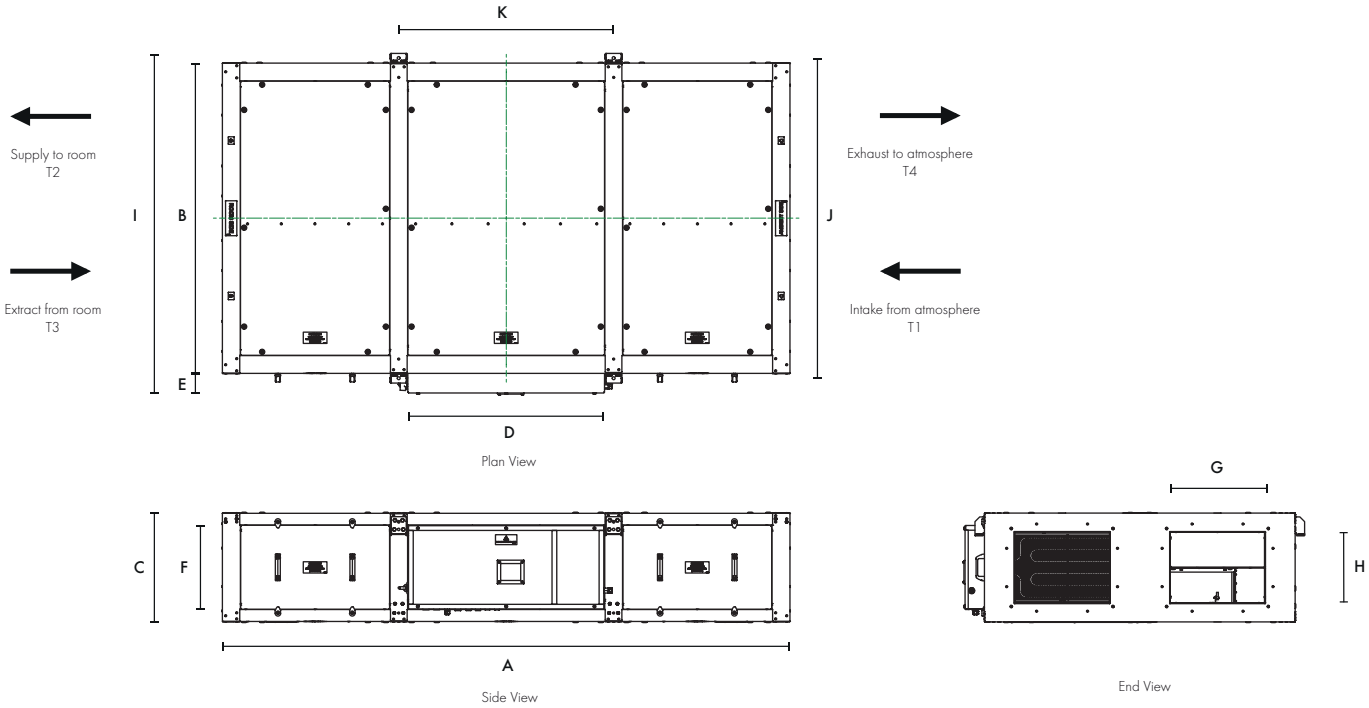

A (LENGTH)	B (WIDTH)	C (HEIGHT)	D	E	F	G	H	I	J	K	kg
2141	1323	350	719	89	248	400	200	1450	1363	791	275

Heat Recovery Efficiency

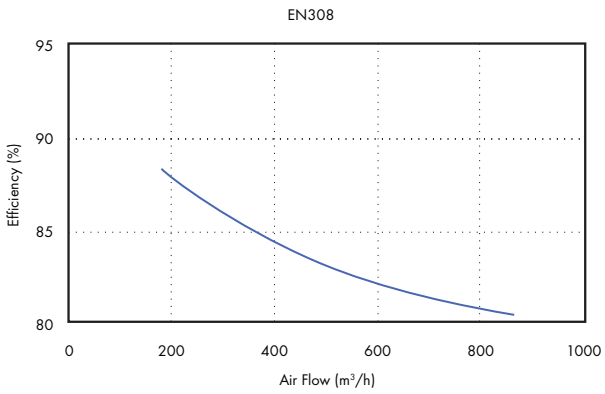

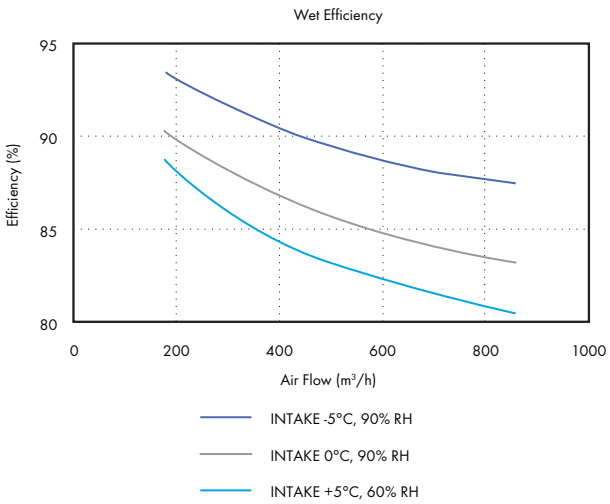

Performance Guide - Sentinel Apex HR06

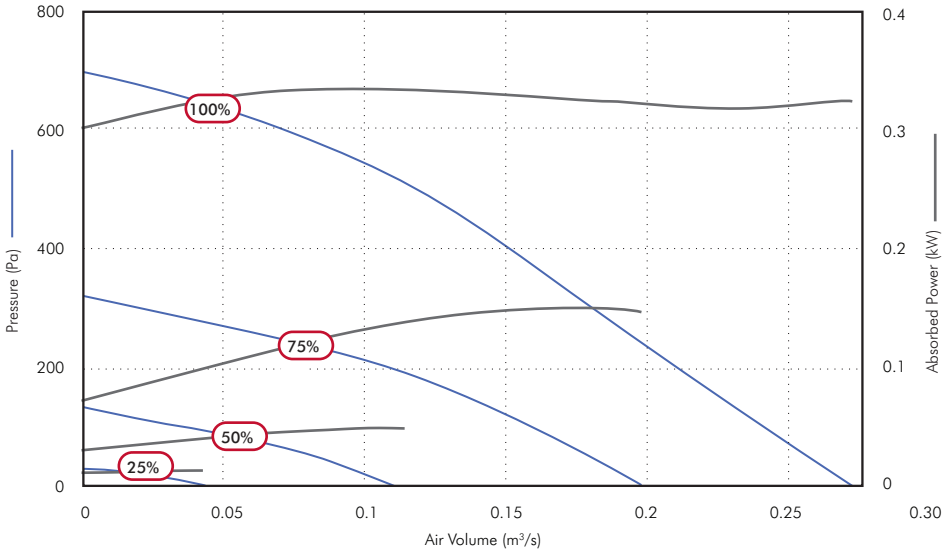

Speed		Airflow, m³/s @ Pa 0	25	50	100	150	200	250	300	400	500	Fans F.L.C.	Supply Voltage	Frost Heater	Unit Rated Current
100%	m³/s	0.27	0.27	0.26	0.24	0.22	0.21	0.19	0.18	0.15	0.12	1.5A	230/1/50	2.4kW	12A
	SFP	1.19	1.21	1.25	1.34	1.42	1.51	1.67	1.82	2.19	2.78				
	kW	0.323	0.320	0.320	0.318	0.318	0.318	0.320	0.323	0.334	0.334				
75%	m³/s	0.20	0.19	0.18	0.16	0.13	0.11	0.07							
	SFP	0.73	0.77	0.84	0.93	1.07	1.23	1.66							
	kW	0.144	0.145	0.147	0.147	0.143	0.132	0.116							
50%	m³/s	0.11	0.10	0.08	0.04										
	SFP	0.41	0.47	0.55	0.95										
	kW	0.045	0.045	0.044	0.036										
25%	m³/s	0.04	0.01												
	SFP	0.012	0.27												
	kW	0.011	1.06												

Sound Data - Sentinel Apex HR06

Speed	Test Mode	63	125	250	500	1k	2k	4k	8k	Sound Pressure level @ 3.0m dBA
100%	Breakout	58	54	56	48	46	43	35	29	32
	Exhaust T4	58	55	61	54	54	54	46	36	
	Extract T3	64	64	72	64	56	56	55	48	
	Intake T1	64	64	71	63	57	56	55	48	
	Supply T2	58	54	59	53	53	54	46	36	
75%	Breakout	53	52	54	40	39	36	29	23	27
	Exhaust T4	52	50	52	47	46	47	39	28	
	Extract T3	60	59	68	54	48	48	47	40	
	Intake T1	59	59	67	55	50	49	47	39	
	Supply T2	52	50	54	46	47	48	39	28	
50%	Breakout	46	51	38	30	28	26	25	21	17
	Exhaust T4	45	55	41	36	35	35	26	23	
	Extract T3	53	64	53	44	37	36	34	26	
	Intake T1	54	68	53	44	39	37	34	26	
	Supply T2	45	49	41	35	35	36	26	24	
25%	Breakout	40	35	30	17	19	16	22	21	9
	Exhaust T4	38	32	27	21	19	17	18	23	
	Extract T3	44	43	35	28	20	18	19	23	
	Intake T1	44	40	35	27	21	18	18	23	
	Supply T2	37	32	27	21	19	18	19	24	

For full sound and performance data please use our Fan Selection Program www.vent-axia.com/fanselector/product/apex
Sound data derived from independent testing at Sound Research Laboratories in accordance with EN ISO 3741:2010. Published dB(A) figures are free field sound pressure levels at 3m with spherical propagation at a reference level of 2 x 10^{-5} Pa. The inlet/outlet sound power level spectra figures are dB with a reference of 10^{-12} watts.

Accessories

Attenutator

Single skinned attenuators purpose designed for the Apex Heat Recovery range to minimise in duct noise. Attenuators are supplied in standard lengths of 900mm, 1200mm and 1500mm, constructed from Galvanised steel with profiled perforated sheet internal, mineral wool sound absorbing material and 30mm profiled flanges for duct and unit mounting. Data has been obtained by testing in accordance with BS EN ISO7235:2009.

	Dimensions (mm)			kg	Insertion Loss dB								m^3/hr @ Pa		
Stock Ref.	Length	Width	Height	Weight	63	125	250	500	1k	2k	4k	8k	300	600	1000
ATT900-HR06	900	400	200	17	2	5	11	19	33	39	31	24	8	30	83
ATT1200-HR06	1200	400	200	21	3	6	14	26	43	45	35	27	8	33	92
ATT1500-HR06	1500	400	200	31	4	7	18	32	52	52	38	30	9	37	103

Duct mounted Heating / Cooling

Rectangular duct mounted heater battery with either electric heating complete with integral thyristor controls, or LPHW water heating, each designed to provide approximately 10°C temperature rise. Chilled water cooler also available with integral condensate tray. Note waterside controls are not included.

		Dimensions (mm)			kg	Heater rating		Water Temp			m^3/hr @ Pa		
Stock Ref.	Type	Length	Width	Height	Weight	kW	Electrical supply	Flow	Return	Connection	300	600	1000
EHB-HR06	HR 6 Duct mounted Rectangular electric heater with controls	300	400	200	5	2.00	230/1/50	N/A	N/A	N/A	8	33	92
HWB-HR06	HR 6 Duct mounted Rectangular LPHW heating battery	200	400	200	5	2.01	N/A	80°C	60°C	1/2"	8	33	92
CWB-HR06	HR 6 Duct mounted Rectangular water cooling battery	200	400	200	5	2.52	N/A	6°C	12°C	3/4"	8	33	92

Roof Assembly

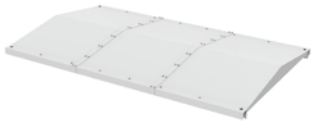

Pitched roof for external mounting, supplied separate for fitting on site.

Stock Ref	Length mm	Width mm	Height mm	Weight kg
WRF-HR06	2141	1455	95	48

Intake / Exhaust Cowl

Weather inlet/discharge cowl for external mounting (one required for each airstream).

Stock Ref	Length mm	Width mm	Height mm	Weight kg
497218	294	402	274	4

Transformation Piece

Rectangular to round transformation piece designed to fix directly to the unit or any of the specific HR06 duct accessories to enable connection to 250mm round ducting.

Stock Ref	Length mm	Width mm	Height mm	Weight kg
497222	250	400	200	3

Flexible Connection

Stock Ref	Length mm	Width mm	Height mm	Weight kg
497018	130	400	200	3

Sentinel Apex HR10

- Very low sound levels independently tested and verified by SRL
- Low SFP utilising IE 5 equivalent motors
- High Heat Recovery Efficiency – up to 93% (EN308)
- Automatic summer bypass sized to eliminate performance loss
- ePM10 50% and ePM1 55% filters as standard (M5 / F7 equivalent)
- Filter access from bottom and side as standard
- Digital on board controller and remote room controller as standard
- App connectivity as standard
- Wired and Wireless communication sensors available
- Integral condensate tray and pump
- Electric frost protection heater as standard

Performance simply delivered with more as standard

Vent-Axia's Sentinel Apex range of commercial heat recovery units with up to 93% EN308 heat recovery efficiency, low sound levels and low specific fan powers the range provides high levels of performance efficiently. A new advanced control system that provides on board control, in room control and App based control full functionality commissioning and monitoring is simply provided. This control can be coupled with Vent-Axia's new range of sensors with wired or wireless communication providing close control of, and monitoring of your indoor air quality. Sensors include CO_2, humidity and temperature and provide both proportional and switch control.

The Sentinel Apex HR10 unit is manufactured with a double skinned pentapost construction incorporating aluzinc frames and panels. The panels are acoustically and thermally treated with 90kg/m^3 high efficiency acoustic and thermally insulating foam (fire retardant to BS476 Part 7 Class 1 & Part 6 Class O). The construction of the unit, IPX4, allows for internal and external mounting as standard, however, the roof assembly should be included for full external locations.

The housing is designed to be as compact as possible for concealed false ceiling applications with top and bottom access panels for maintenance. Access panels are sized to enable single person maintenance.

The fans utilised in the Sentinel Apex HR10 are the latest EC/DC external rotor motors specifically chosen for their low power consumption and low noise characteristics. The assembly is dynamically balanced to DIN ISO 1940 Grade 6.3. Ball bearings are greased for life. Insulation is Class 'B' (from -25°C to +60°C). All models incorporate internal electronic overload protection and a soft start function.

The Sentinel Apex HR10 is complete as standard with ISO ePM10 50% (M5) extract filter and ISO ePM1 55% (F7) supply, complete with a filter change warning. Filters have been selected to fully comply with the requirements of ISO16890 whilst having low pressure loss characteristics.

An integral electric frost heater is included to provide frost protection of the cell and filters down to -10°C. The integral controls also allow this heater to be utilised as a top up heater.

The unit is complete with an integral summer bypass facility which has been designed to provide full bypass without impact to the airflow or power consumption of the unit whilst in bypass mode.

Airflow and power consumption tested in accordance with BS EN 5801. Sound data derived from independent testing at Sound Research Laboratories in accordance with EN ISO 3741:2010. Published dB(A) figures are free field sound pressure levels at 3m with spherical propagation at a reference level of 2 x 10^{-5} Pa. The inlet/outlet sound power level spectra figures are dB with a reference of 10^{-12} watts.

An integral condensate tray is fitted along with an internal quiet running high quality pump allowing for removal of the condensate via a 10mm condensate pipe.

To facilitate normal access and maintenance to the unit there are both side and bottom access panels as standard. Should it be required, all panels are removable allowing access and removal of the heat recovery cell and all other components. A lockable isolator is fitted to the control panel preventing accidental operation whilst any maintenance is being carried out.

The electrical supply for the unit is 230V +/- 10% / 50/60Hz / 1ph. A 24V DC power is available from the unit for powering any of the matched sensors and switches.

The Sentinel Apex HR10 unit is fitted with an integrated control system as standard with a purpose designed user interface controller incorporating an alphanumerical 2 line display with 4 button keypad for fan status and a basic commissioning setup mounted within the control panel. A remote HMI is also included for that can be mounted within the room that is being ventilated. This allows for local monitoring of the unit along with the commissioning set-up.

App based control is also available via the Vent-Axia Connect App. This provides detailed commissioning and monitoring information and the ability to control the unit remotely.

A full range of sensors is available including humidity, temperature and CO_2 monitoring. These sensors are available for both wired and wireless communication with the wireless sensors being either local mains or battery powered.

Model	Stock Ref
Sentinel Apex HR10	HR10X

Dimensions (mm)

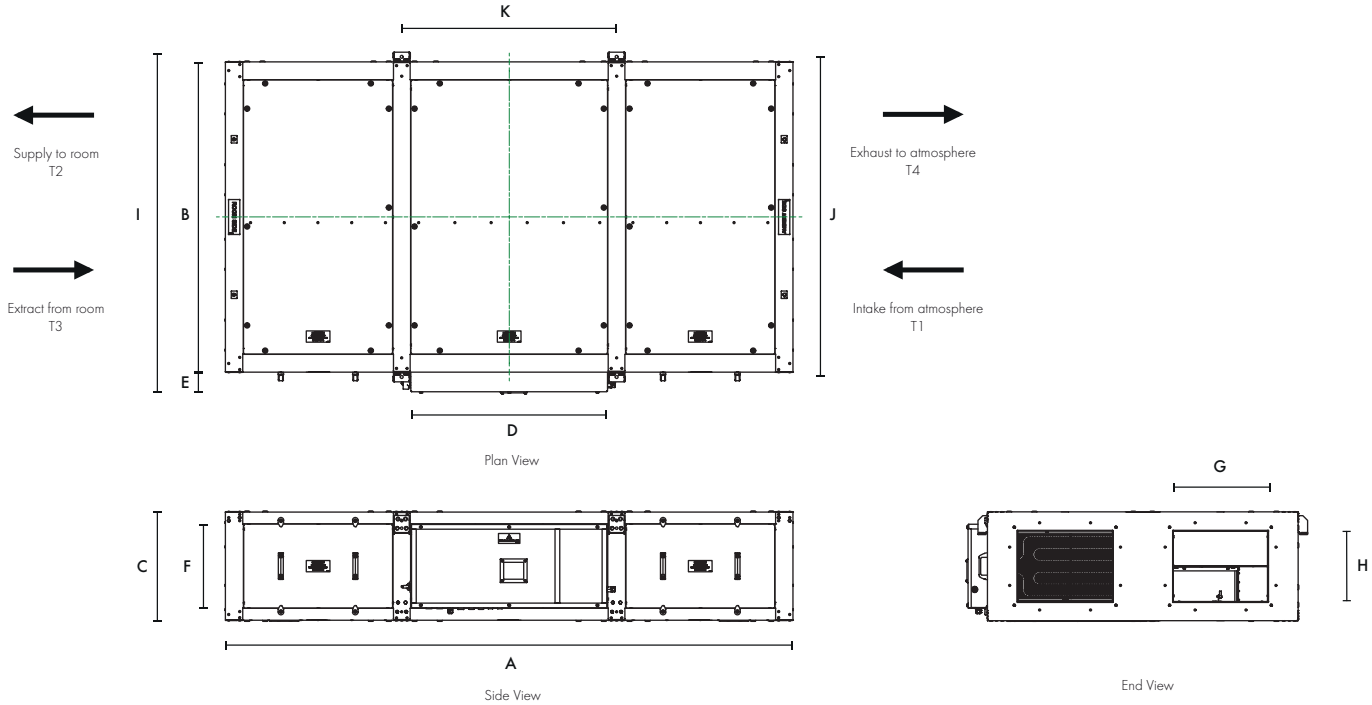

A (LENGTH)	B (WIDTH)	C (HEIGHT)	D	E	F	G	H	I	J	K	kg
2400	1312	460	831	88	356	400	300	1440	1353	908	388

Heat Recovery Efficiency

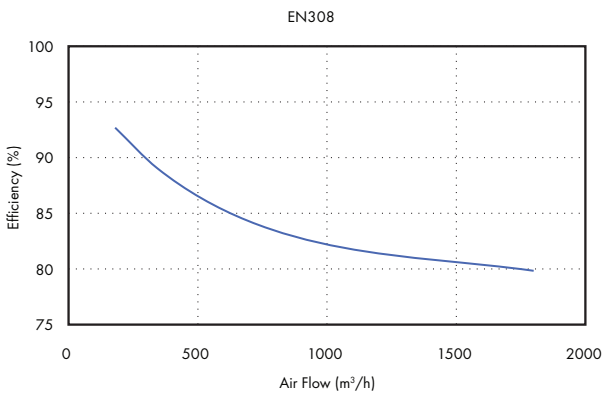

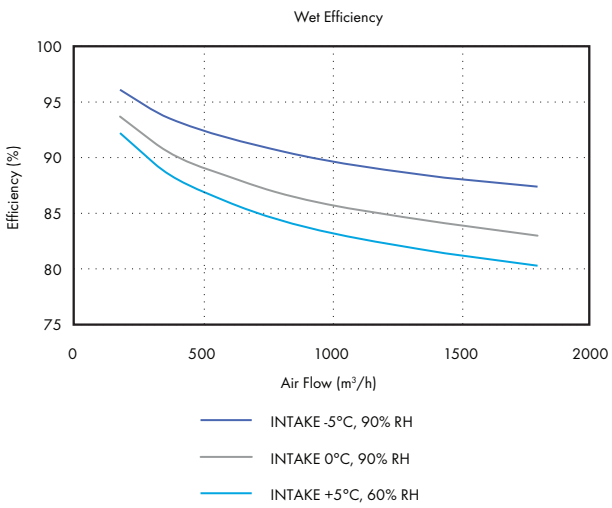

Performance Guide - Sentinel Apex HR10

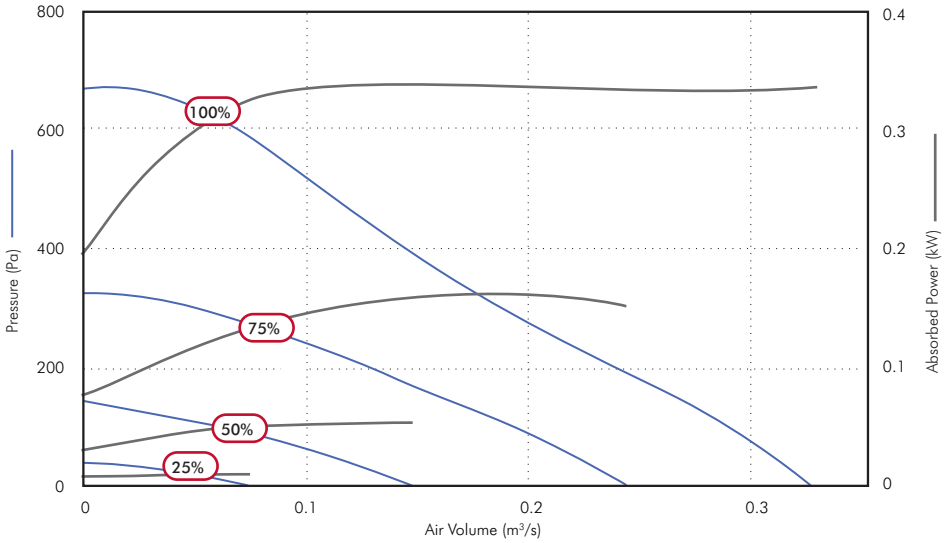

Speed		Airflow, m³/s @ Pa 0	25	50	100	150	200	250	300	400	500	Fans F.L.C.	Supply Voltage	Frost Heater	Unit Rated Current
100%	m³/s	0.33	0.32	0.31	0.29	0.26	0.24	0.21	0.18	0.15	0.10	1.5A	230/1/50	2.8kW	14A
	SFP	1.03	1.05	1.08	1.17	1.28	1.40	1.61	1.87	2.32	3.24				
	kW	0.337	0.337	0.337	0.334	0.333	0.333	0.335	0.337	0.337	0.338				
75%	m³/s	0.24	0.23	0.22	0.19	0.15	0.13	0.09							
	SFP	0.62	0.67	0.74	0.84	1.03	1.22	1.55							
	kW	0.151	0.155	0.160	0.160	0.160	0.153	0.138							
50%	m³/s	0.15	0.13	0.11	0.06										
	SFP	0.34	0.37	0.47	0.79										
	kW	0.050	0.050	0.051	0.046										
25%	m³/s	0.07	0.03												
	SFP	0.08	0.21												
	kW	0.006	0.006												

Sound Data - Sentinel Apex HR10

Speed	Test Mode	63	125	250	500	1k	2k	4k	8k	Sound Pressure level @ 3.0m dBA
100%	Breakout	57	53	55	47	42	40	36	26	30
	Exhaust T4	55	57	63	54	56	52	42	33	
	Extract T3	58	59	71	61	59	59	56	51	
	Intake T1	58	58	68	58	60	59	56	51	
	Supply T2	51	49	61	54	54	51	42	34	
75%	Breakout	51	48	48	44	35	33	25	21	24
	Exhaust T4	50	53	54	51	48	45	33	25	
	Extract T3	53	56	52	56	54	51	48	41	
	Intake T1	53	56	61	51	54	51	47	39	
	Supply T2	46	46	53	48	46	44	33	25	
50%	Breakout	45	44	35	33	24	23	18	21	14
	Exhaust T4	44	49	39	38	38	35	22	23	
	Extract T3	48	54	50	44	42	41	36	25	
	Intake T1	47	52	51	42	42	40	34	25	
	Supply T2	40	43	38	37	37	34	22	23	
25%	Breakout	36	31	27	18	14	15	17	21	6
	Exhaust T4	36	30	24	20	19	17	18	23	
	Extract T3	40	37	34	26	23	19	19	22	
	Intake T1	40	34	32	23	20	17	19	23	
	Supply T2	31	27	24	20	17	15	18	23	

For full sound and performance data please use our Fan Selection Program www.vent-axia.com/fanselector/product/apex
Sound data derived from independent testing at Sound Research Laboratories in accordance with EN ISO 3741:2010. Published dB(A) figures are free field sound pressure levels at 3m with spherical propagation at a reference level of 2 x 10^{-5} Pa. The inlet/outlet sound power level spectra figures are dB with a reference of 10^{-12} watts.

Accessories

Attenutator

Single skinned attenuators purpose designed for the Apex Heat Recovery range to minimise in duct noise. Attenuators are supplied in standard lengths of 900mm, 1200mm and 1500mm, constructed from Galvanised steel with profiled perforated sheet internal, mineral wool sound absorbing material and 30mm profiled flanges for duct and unit mounting. Data has been obtained by testing in accordance with BS EN ISO7235:2009.

	Dimensions (mm)			kg	Insertion Loss dB								m^3/hr @ Pa				
Stock Ref.	Length	Width	Height	Weight	63	125	250	500	1k	2k	4k	8k	300	600	1000	1500	2000
ATT900-HR10	900	400	300	18	2	3	8	15	27	21	14	10	1	3	8	17	30
ATT1200-HR10	1200	400	300	23	2	4	10	19	36	24	16	12	1	3	8	18	32
ATT1500-HR10	1500	400	300	34	2	5	12	24	44	28	19	14	1	3	9	20	36

Duct mounted Heating / Cooling

Rectangular duct mounted heater battery with either electric heating complete with integral thyristor controls, or LPHW water heating, each designed to provide approximately 10°C temperature rise. Chilled water cooler also available with integral condensate tray. Note waterside controls are not included.

		Dimensions (mm)			kg	Heater rating	Electrical	Water Temp			m^3/hr @ Pa				
Stock Ref.	Type	Length	Width	Height	Weight	kW	supply	Flow	Return	Connection	300	600	1000	1500	2000
EHB-HR10	HR 10 Duct mounted Rectangular electric heater with controls	300	400	300	6	4.00	230/1/50	N/A	N/A	N/A	1	3	8	18	32
HWB-HR10	HR 10 Duct mounted Rectangular LPHW heating battery	200	400	300	7	3.35	N/A	80°C	60°C	1/2"	1	3	8	18	32
CWB-HR10	HR 10 Duct mounted Rectangular water cooling battery	200	500	300	7	4.13	N/A	6°C	12°C	3/4"	1	3	8	18	32

Roof Assembly

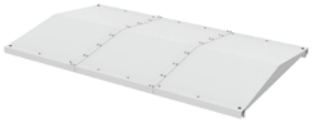

Stock Ref	Length mm	Width mm	Height mm	Weight kg
WRF-HR10	2400	1455	95	52

Intake / Exhaust Cowl

Weather inlet/discharge cowl for external mounting (one required for each airstream).

Stock Ref	Length mm	Width mm	Height mm	Weight kg
497219	394	402	380	6

Transformation Piece

Rectangular to round transformation piece designed to fix directly to the unit or any of the specific HR10 duct accessories to enable connection to 315mm round ducting.

Stock Ref	Length mm	Width mm	Height mm	Weight kg
497223	325	400	300	4

Flexible Connection

Stock Ref	Length mm	Width mm	Height mm	Weight kg
497019	130	400	300	4

Sentinel Apex HR15

- Very low sound levels independently tested and verified by SRL
- Low SFP utilising IE 5 equivalent motors
- High Heat Recovery Efficiency – up to 93% (EN308)
- Automatic summer bypass sized to eliminate performance loss
- ePM10 50% and ePM1 55% filters as standard (M5 / F7 equivalent)
- Filter access from bottom and side as standard
- Digital on board controller and remote room controller as standard
- App connectivity as standard
- Wired and Wireless communication sensors available
- Integral condensate tray and pump
- Electric frost protection heater as standard

Performance simply delivered with more as standard

Vent-Axia's Sentinel Apex range of commercial heat recovery units with up to 93% EN308 heat recovery efficiency, low sound levels and low specific fan powers the range provides high levels of performance efficiently. A new advanced control system that provides on board control, in room control and App based control full functionality commissioning and monitoring is simply provided. This control can be coupled with Vent-Axia's new range of sensors with wired or wireless communication providing close control of, and monitoring of your indoor air quality. Sensors include CO_2, humidity and temperature and provide both proportional and switch control.

The Sentinel Apex HR15 unit is manufactured with a double skinned pentapost construction incorporating aluzinc frames and panels. The panels are acoustically and thermally treated with 90kg/m^3 high efficiency acoustic and thermally insulating foam (fire retardant to BS476 Part 7 Class 1 & Part 6 Class O). The construction of the unit, IPX4, allows for internal and external mounting as standard, however, the roof assembly should be included for full external locations.

The housing is designed to be as compact as possible for concealed false ceiling applications with top and bottom access panels for maintenance. Access panels are sized to enable single person maintenance.

The fans utilised in the Sentinel Apex HR15 are the latest EC/DC external rotor motors specifically chosen for their low power consumption and low noise characteristics. The assembly is dynamically balanced to DIN ISO 1940 Grade 6.3. Ball bearings are greased for life. Insulation is Class 'B' (from -25°C to +60°C). All models incorporate internal electronic overload protection and a soft start function.

The Sentinel Apex HR15 is complete as standard with ISO ePM10 50% (M5) extract filter and ISO ePM1 55% (F7) supply, complete with a filter change warning. Filters have been selected to fully comply with the requirements of ISO16890 whilst having low pressure loss characteristics.

An integral electric frost heater is included to provide frost protection of the cell and filters down to -10°C. The integral controls also allow this heater to be utilised as a top up heater.

The unit is complete with an integral summer bypass facility which has been designed to provide full bypass without impact to the airflow or power consumption of the unit whilst in bypass mode.

Airflow and power consumption tested in accordance with BS EN 5801. Sound data derived from independent testing at Sound Research Laboratories in accordance with EN ISO 3741:2010. Published dB(A) figures are free field sound pressure levels at 3m with spherical propagation at a reference level of 2 x 10^{-5} Pa. The inlet/outlet sound power level spectra figures are dB with a reference of 10^{-12} watts.

An integral condensate tray is fitted along with an internal quiet running high quality pump allowing for removal of the condensate via a 10mm condensate pipe.

To facilitate normal access and maintenance to the unit there are both side and bottom access panels as standard. Should it be required, all panels are removable allowing access and removal of the heat recovery cell and all other components. A lockable isolator is fitted to the control panel preventing accidental operation whilst any maintenance is being carried out.

The electrical supply for the unit is 230V +/- 10% / 50/60Hz / 1ph. A 24V DC power is available from the unit for powering any of the matched sensors and switches.

The Sentinel Apex HR15 unit is fitted with an integrated control system as standard with a purpose designed user interface controller incorporating an alphanumerical 2 line display with 4 button keypad for fan status and a basic commissioning setup mounted within the control panel. A remote HMI is also included for that can be mounted within the room that is being ventilated. This allows for local monitoring of the unit along with the commissioning set-up.

App based control is also available via the Vent-Axia Connect App. This provides detailed commissioning and monitoring information and the ability to control the unit remotely.

A full range of sensors is available including humidity, temperature and CO_2 monitoring. These sensors are available for both wired and wireless communication with the wireless sensors being either local mains or battery powered.

Model	Stock Ref
Sentinel Apex HR15	HR15X

Dimensions (mm)

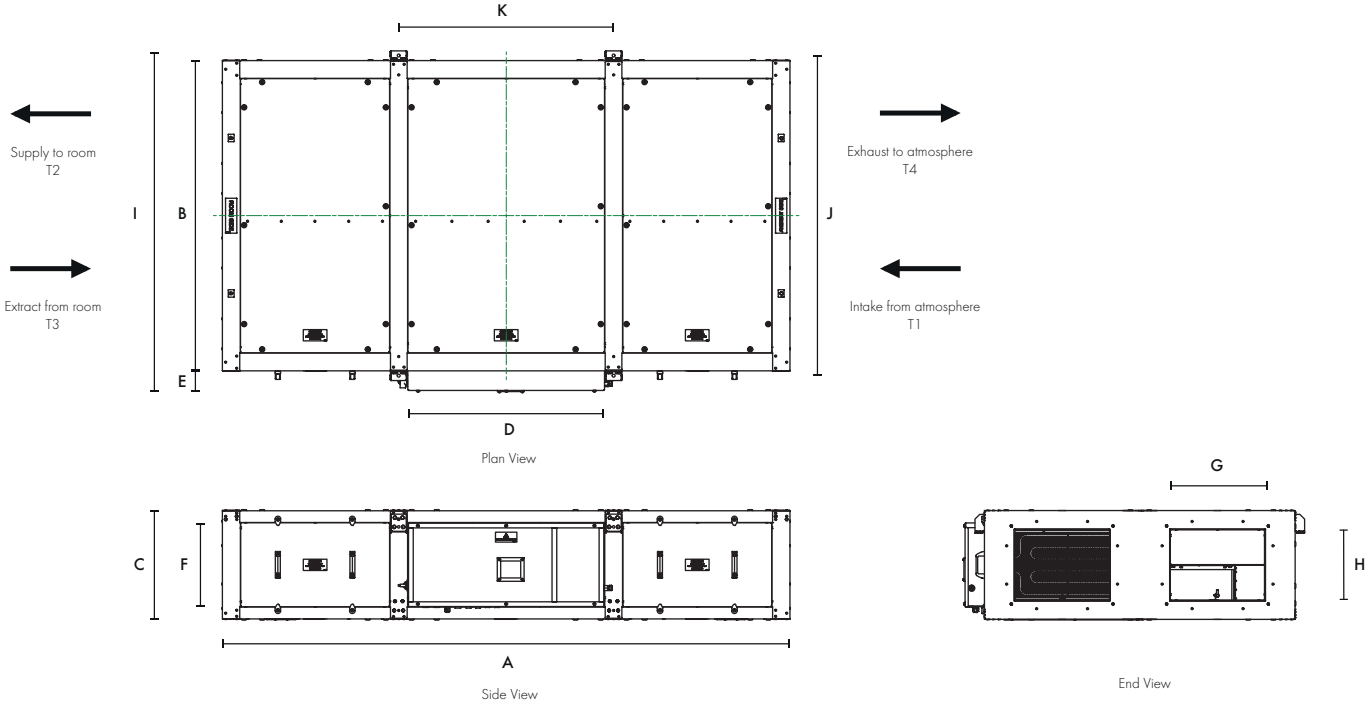

A (LENGTH)	B (WIDTH)	C (HEIGHT)	D	E	F	G	H	I	J	K	kg
2400	1312	460	831	88	356	400	300	1440	1353	908	348

Heat Recovery Efficiency

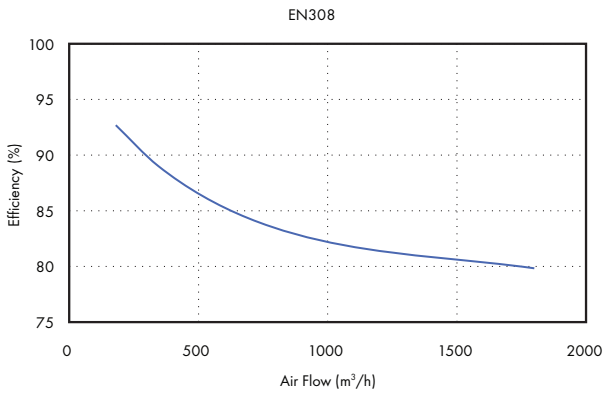

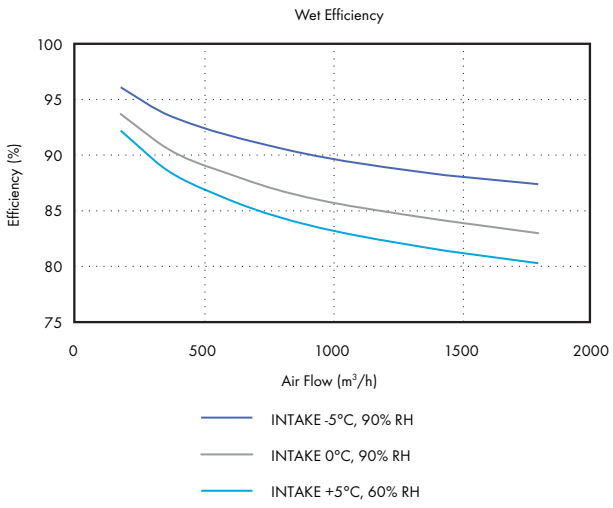

Performance Guide - Sentinel Apex HR15

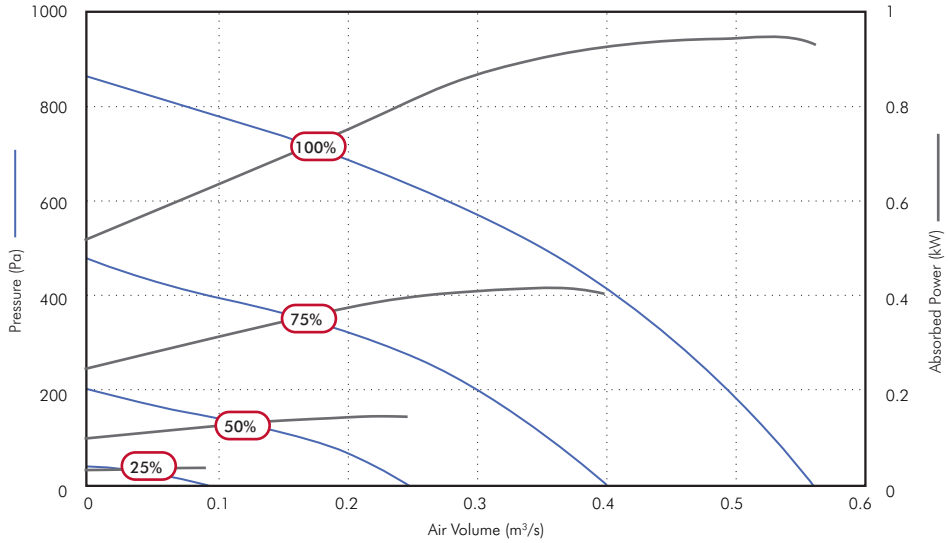

Speed		Airflow, m³/s @ Pa 0	25	50	100	150	200	300	400	Fans F.L.C.	Supply Voltage	Frost Heater	Unit Rated Current
100%	m³/s	0.56	0.55	0.54	0.52	0.50	0.49	0.45	0.40	5.0A	230/1/50	5.6kW	29.0A
	SFP	1.49	1.53	1.56	1.59	1.67	1.71	1.85	2.06				
	kW	0.83	0.85	0.85	0.84	0.84	0.84	0.84	0.83				
75%	m³/s	0.40	0.39	0.38	0.35	0.33	0.30	0.22	0.09				
	SFP	0.91	0.96	0.97	1.06	1.13	1.23	1.55	2.93				
	kW	0.36	0.38	0.37	0.37	0.37	0.36	0.34	0.27				
50%	m³/s	0.25	0.23	0.21	0.16	0.09							
	SFP	0.51	0.56	0.60	0.76	1.20							
	kW	0.13	0.13	0.13	0.12	0.11							
25%	m³/s	0.09	0.04										
	SFP	0.32	0.63										
	kW	0.03	0.03										

Sound Data - Sentinel Apex HR15

Speed	Test Mode	63	125	250	500	1k	2k	4k	8k	Sound Pressure level @ 3.0m dBA
100%	Breakout	65	59	67	59	51	48	41	40	38
	Exhaust T4	63	60	46	64	62	57	46	36	
	Extract T3	69	67	80	72	64	61	57	57	
	Intake T1	70	67	79	69	65	62	57	53	
	Supply T2	63	59	74	65	62	57	46	40	
75%	Breakout	59	57	62	52	43	38	32	32	30
	Exhaust T4	57	57	65	57	53	47	36	29	
	Extract T3	64	64	72	65	56	53	48	50	
	Intake T1	63	65	74	62	56	52	47	47	
	Supply T2	56	56	67	57	53	58	36	33	
50%	Breakout	53	57	46	40	32	27	23	24	22
	Exhaust T4	50	53	48	43	41	35	24	24	
	Extract T3	55	61	60	53	45	40	40	34	
	Intake T1	56	62	60	51	45	40	38	28	
	Supply T2	49	52	50	43	41	35	25	24	
25%	Breakout	49	51	40	31	27	23	20	24	14
	Exhaust T4	49	38	34	25	24	22	17	24	
	Extract T3	52	42	42	31	26	26	18	24	
	Intake T1	51	42	41	30	27	23	18	23	
	Supply T2	47	36	33	25	24	21	16	23	

For full sound and performance data please use our Fan Selection Program www.vent-axia.com/fanselector/product/apex
Sound data derived from independent testing at Sound Research Laboratories in accordance with EN ISO 3741:2010. Published dB(A) figures are free field sound pressure levels at 3m with spherical propagation at a reference level of 2 x 10^{-5} Pa. The inlet/outlet sound power level spectra figures are dB with a reference of 10^{-12} watts.

Accessories

Attenutator

Single skinned attenuators purpose designed for the Apex Heat Recovery range to minimise in duct noise. Attenuators are supplied in standard lengths of 900mm, 1200mm and 1500mm, constructed from Galvanised steel with profiled perforated sheet internal, mineral wool sound absorbing material and 30mm profiled flanges for duct and unit mounting. Data has been obtained by testing in accordance with BS EN ISO7235:2009.

	Dimensions (mm)			kg	Insertion Loss dB								m^3/hr @ Pa				
Stock Ref.	Length	Width	Height	Weight	63	125	250	500	1k	2k	4k	8k	300	600	1000	1500	2000
ATT900-HR15	900	400	300	18	2	3	8	15	27	21	14	10	1	3	8	17	30
ATT1200-HR15	1200	400	300	23	2	4	10	19	36	24	16	12	1	3	8	18	32
ATT1500-HR15	1500	400	300	34	2	5	12	24	44	28	19	14	1	3	9	20	36

Duct mounted Heating / Cooling

Rectangular duct mounted heater battery with either electric heating complete with integral thyristor controls, or LPHW water heating, each designed to provide approximately 10°C temperature rise. Chilled water cooler also available with integral condensate tray. Note waterside controls are not included.

		Dimensions (mm)			kg	Heater rating	Electrical	Water Temp			m^3/hr @ Pa				
Stock Ref.	Type	Length	Width	Height	Weight	kW	supply	Flow	Return	Connection	300	600	1000	1500	2k
EHB-HR15	Heater with controls	300	400	300	7	5.00	230/1/50	N/A	N/A	N/A	1	3	8	18	32
HWB-HR15	HR 15 Duct mounted Rectangular LPHW heating battery	200	400	310	8	5.03	N/A	80°C	60°C	1/2"	1	3	8	18	32
CWB-HR15	HR 15 Duct mounted Rectangular water cooling battery	200	500	350	8	6.23	N/A	6°C	12°C	3/4"	1	3	8	18	32

Roof Assembly

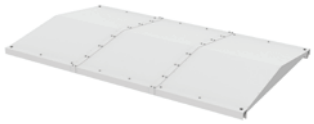

Stock Ref	Length mm	Width mm	Height mm	Weight kg
WRF-HR15	2400	1455	95	52

Intake / Exhaust Cowl

Weather inlet/discharge cowl for external mounting (one required for each airstream).

Stock Ref	Length mm	Width mm	Height mm	Weight kg
496597	394	402	380	6

Transformation Piece

Rectangular to round transformation piece designed to fix directly to the unit or any of the specific HR15 duct accessories to enable connection to 315mm round ducting.

Stock Ref	Length mm	Width mm	Height mm	Weight kg
495296	325	400	300	4

Flexible Connection

Stock Ref	Length mm	Width mm	Height mm	Weight kg
497020	130	400	300	4

Sentinel Apex HR21

- Very low sound levels independently tested and verified by SRL
- Low SFP utilising IE 5 equivalent motors
- High Heat Recovery Efficiency – up to 93% (EN308)
- Automatic summer bypass sized to eliminate performance loss
- ePM10 50% and ePM1 55% filters as standard (M5 / F7 equivalent)
- Filter access from bottom and side as standard
- Digital on board controller and remote room controller as standard
- App connectivity as standard
- Wired and Wireless communication sensors available
- Integral condensate tray and pump
- Electric frost protection heater as standard

Performance simply delivered with more as standard

Vent-Axia's Sentinel Apex range of commercial heat recovery units with up to 93% EN308 heat recovery efficiency, low sound levels and low specific fan powers the range provides high levels of performance efficiently. A new advanced control system that provides on board control, in room control and App based control full functionality commissioning and monitoring is simply provided. This control can be coupled with Vent-Axia's new range of sensors with wired or wireless communication providing close control of, and monitoring of your indoor air quality. Sensors include CO_2, humidity and temperature and provide both proportional and switch control.

The Sentinel Apex HR21 unit is manufactured with a double skinned pentapost construction incorporating aluzinc frames and panels. The panels are acoustically and thermally treated with 90kg/m^3 high efficiency acoustic and thermally insulating foam (fire retardant to BS476 Part 7 Class 1 & Part 6 Class O). The construction of the unit, IPX4, allows for internal and external mounting as standard, however, the roof assembly should be included for full external locations.

The housing is designed to be as compact as possible for concealed false ceiling applications with top and bottom access panels for maintenance. Access panels are sized to enable single person maintenance.

The fans utilised in the Sentinel Apex HR21 are the latest EC/DC external rotor motors specifically chosen for their low power consumption and low noise characteristics. The assembly is dynamically balanced to DIN ISO 1940 Grade 6.3. Ball bearings are greased for life. Insulation is Class 'B' (from -25°C to +60°C). All models incorporate internal electronic overload protection and a soft start function.

The Sentinel Apex HR21 is complete as standard with ISO ePM10 50% (M5) extract filter and ISO ePM1 55% (F7) supply, complete with a filter change warning. Filters have been selected to fully comply with the requirements of ISO16890 whilst having low pressure loss characteristics.

An integral electric frost heater is included to provide frost protection of the cell and filters down to -10°C. The integral controls also allow this heater to be utilised as a top up heater.

The unit is complete with an integral summer bypass facility which has been designed to provide full bypass without impact to the airflow or power consumption of the unit whilst in bypass mode.

Airflow and power consumption tested in accordance with BS EN 5801. Sound data derived from independent testing at Sound Research Laboratories in accordance with EN ISO 3741:2010. Published dB(A) figures are free field sound pressure levels at 3m with spherical propagation at a reference level of 2 x 10^{-5} Pa. The inlet/outlet sound power level spectra figures are dB with a reference of 10^{-12} watts.

An integral condensate tray is fitted along with an internal quiet running high quality pump allowing for removal of the condensate via a 10mm condensate pipe.

To facilitate normal access and maintenance to the unit there are both side and bottom access panels as standard. Should it be required, all panels are removable allowing access and removal of the heat recovery cell and all other components. A lockable isolator is fitted to the control panel preventing accidental operation whilst any maintenance is being carried out.

The electrical supply for the unit is 230V +/- 10% / 50/60Hz / 1ph. A 24V DC power is available from the unit for powering any of the matched sensors and switches.

The Sentinel Apex HR21 unit is fitted with an integrated control system as standard with a purpose designed user interface controller incorporating an alphanumerical 2 line display with 4 button keypad for fan status and a basic commissioning setup mounted within the control panel. A remote HMI is also included for that can be mounted within the room that is being ventilated. This allows for local monitoring of the unit along with the commissioning set-up.

App based control is also available via the Vent-Axia Connect App. This provides detailed commissioning and monitoring information and the ability to control the unit remotely.

A full range of sensors is available including humidity, temperature and CO_2 monitoring. These sensors are available for both wired and wireless communication with the wireless sensors being either local mains or battery powered.

Model	Stock Ref
Sentinel Apex HR21	HR21X

Dimensions (mm)

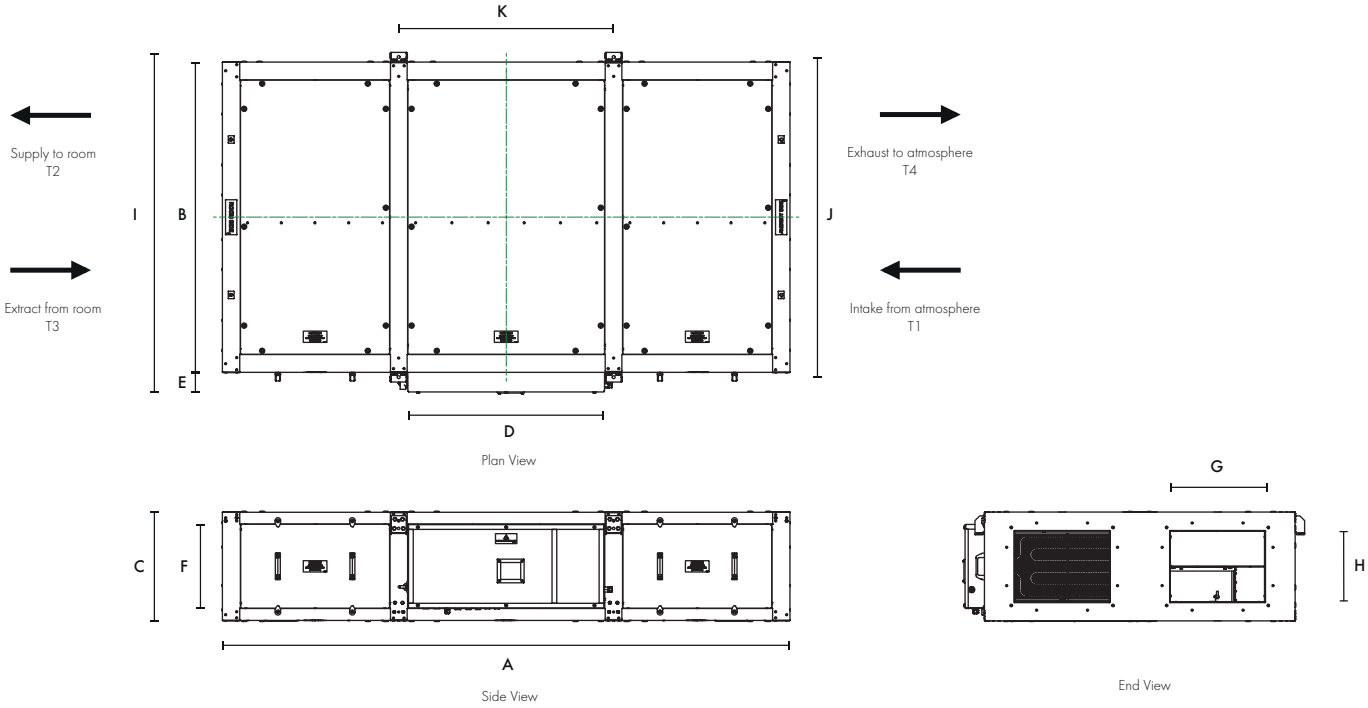

A (LENGTH)	B (WIDTH)	C (HEIGHT)	D	E	F	G	H	I	J	K	kg
2965	1319	620	1024	88	518	500	400	1446	1359	1097	470

Heat Recovery Efficiency

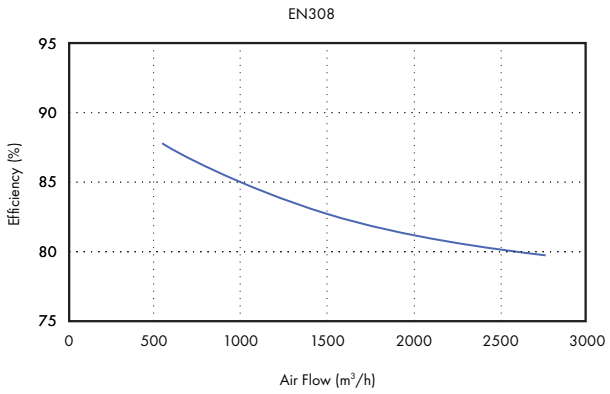

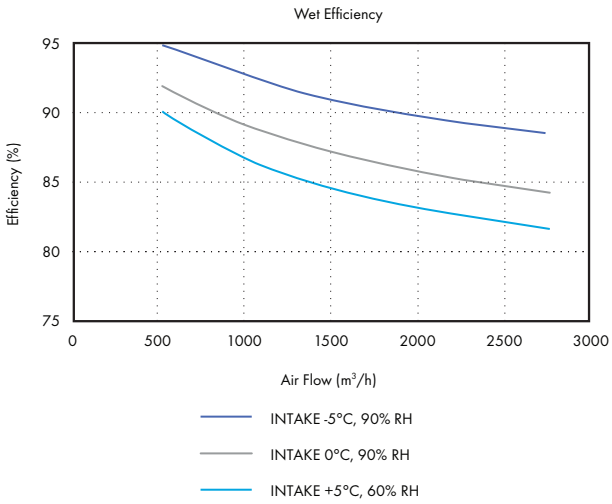

Performance Guide - Sentinel Apex HR21

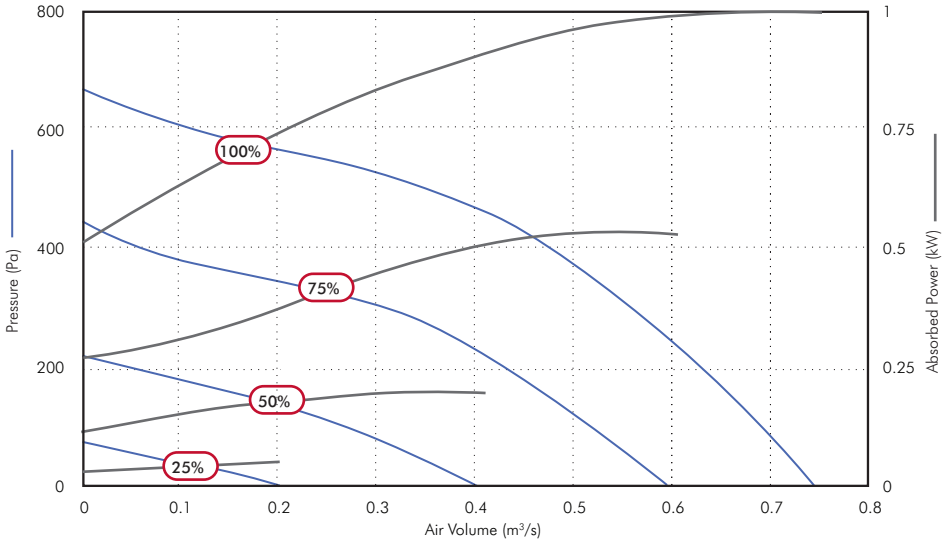

Speed		Airflow, m³/s @ Pa 0	25	50	100	150	200	250	300	400	500	600	Fans F.L.C.	Supply Voltage	Frost Heater	Unit Rated Current
100%	m³/s	0.76	0.74	0.72	0.70	0.66	0.63	0.60	0.57	0.48	0.34	0.11	4.2A	230/1/50	7.8kW	39A
	SFP	1.31	1.36	1.40	1.45	1.52	1.59	1.64	1.72	2.00	2.53	6.08				
	kW	1.004	1.004	1.005	1.007	1.009	1.002	0.988	0.973	0.970	0.856	0.655				
75%	m³/s	0.60	0.59	0.56	0.52	0.49	0.43	0.38	0.31							
	SFP	0.89	0.92	0.97	1.04	1.09	1.22	1.32	1.49							
	kW	0.538	0.540	0.542	0.541	0.534	0.522	0.498	0.459							
50%	m³/s	0.41	0.39	0.35	0.27	0.17	0.03									
	SFP	0.53	0.55	0.62	0.75	1.08	5.22									
	kW	0.214	0.213	0.213	0.204	0.179	0.145									
25%	m³/s	0.20	0.15	0.08												
	SFP	0.30	0.39	0.59												
	kW	0.061	0.057	0.050												

Sound Data - Sentinel Apex HR21

Speed	Test Mode	63	125	250	500	1k	2k	4k	8k	Sound Pressure level @ 3.0m dBA
100%	Breakout	60	57	57	47	44	38	34	32	100%
	Exhaust T4	60	58	60	57	57	51	44	42	
	Extract T3	64	65	67	64	61	56	50	48	
	Intake T1	63	65	68	64	61	56	51	49	
	Supply T2	59	59	62	57	57	51	46	42	
75%	Breakout	54	57	50	42	37	34	28	25	75%
	Exhaust T4	54	58	52	49	50	44	37	33	
	Extract T3	58	65	63	56	53	49	43	41	
	Intake T1	57	63	61	58	53	48	43	41	
	Supply T2	52	54	52	48	50	44	39	34	
50%	Breakout	51	52	45	35	31	27	21	22	50%
	Exhaust T4	65	55	47	40	42	36	30	27	
	Extract T3	60	60	58	49	44	40	35	31	
	Intake T1	57	62	56	49	45	39	34	31	
	Supply T2	53	49	47	39	42	36	29	27	
25%	Breakout	48	39	42	24	22	17	18	22	25%
	Exhaust T4	48	35	35	29	31	23	20	25	
	Extract T3	57	44	44	37	34	29	21	26	
	Intake T1	53	43	46	37	32	56	20	25	
	Supply T2	44	34	34	28	30	22	19	25	

For full sound and performance data please use our Fan Selection Program www.vent-axia.com/fanselector/product/apex
Sound data derived from independent testing at Sound Research Laboratories in accordance with EN ISO 3741:2010. Published dB(A) figures are free field sound pressure levels at 3m with spherical propagation at a reference level of 2×10^{-5} Pa. The inlet/outlet sound power level spectra figures are dB with a reference of 10^{-12} watts.

Accessories

Attenutator

Single skinned attenuators purpose designed for the Apex Heat Recovery range to minimise in duct noise. Attenuators are supplied in standard lengths of 900mm, 1200mm and 1500mm, constructed from Galvanised steel with profiled perforated sheet internal, mineral wool sound absorbing material and 30mm profiled flanges for duct and unit mounting. Data has been obtained by testing in accordance with BS EN ISO7235:2009.

	Dimensions (mm)			kg	Insertion Loss dB								m^3/hr @ Pa					
Stock Ref.	Length	Width	Height	Weight	63	125	250	500	1k	2k	4k	8k	300	600	1000	1500	2000	3000
ATT900-HR21	900	500	400	25	3	7	11	20	28	21	13	8	1	2	5	11	19	43
ATT1200-HR21	1200	500	400	32	4	9	15	26	35	26	15	10	1	2	5	12	21	47
ATT1500-HR21	1500	500	400	46	5	11	19	33	45	31	18	11	1	2	5	12	22	50

Duct mounted Heating / Cooling

Rectangular Duct mounted heater battery with either electric heating complete with integral thyristor controls, or LPHW water heating, each designed to provide approximately 10°C temperature rise. Chilled water cooler also available with integral condensate tray. Note waterside controls are not included.

		Dimensions (mm)			kg	Heater rating	Electrical	Water Temp			m^3/hr @ Pa					
Stock Ref.	Type	Length	Width	Height	Weight	kW	supply	Flow	Return	Connection	300	600	1000	1500	2000	3000
EHB-HR21	HR 21 Duct mounted Rectangular electric heater with controls	300	500	400	10	7.50	230/1/50	N/A	N/A	N/A	1	2	5	12	21	47
HWB-HR21	HR 21 Duct mounted Rectangular LPHW heating battery	200	500	400	10	7.03	N/A	80°C	60°C	1/2"	1	2	5	12	21	47
CWB-HR21	HR 21 Duct mounted Rectangular water cooling battery	200	500	400	10	8.65	N/A	6°C	12°C	3/4"	1	2	5	12	21	47

Roof Assembly

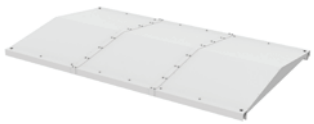

Stock Ref	Length mm	Width mm	Height mm	Weight kg
WRF-HR21	2965	1455	95	63

Intake / Exhaust Cowl

Weather inlet/discharge cowl for external mounting (one required for each airstream).

Stock Ref	Length mm	Width mm	Height mm	Weight kg
497220	494	502	510	9

Transformation Piece

Rectangular to round transformation piece designed to fix directly to the unit or any of the specific HR21 duct accessories to enable connection to 400mm round ducting.

Stock Ref	Length mm	Width mm	Height mm	Weight kg
497224	325	500	400	5

Flexible Connection

Stock Ref	Length mm	Width mm	Height mm	Weight kg
497021	130	500	400	4

Remote System Hood

- Models available with either a White or Brushed Aluminium trim
- Fits within a 600mm wide aperture (300mm deep)
- Complete with two low energy 9W lamps
- All models are fitted with a metal washable grease filter as standard
- 125mm galvanised duct connection piece
- Integral fire damper in accordance with BRE 398
- Weight: 3.7kg

Product

The Pull-out System Hood is designed to fit in a 600mm aperture above a hob. The telescopic hood incorporates two flat removable metal grease filters, two low energy light bulbs and is available with a White or Brushed Aluminium front trim.

The hood contains an integral fire damper in accordance with BRE Digest 398 and is connected to the mechanical ventilation unit by a galvanised steel duct connection piece. When the hood is opened the mechanical ventilation unit goes to boost speed.

Why install a cooker hood?

Steam created during the cooking process can cause moisture to form on walls and furniture. In extreme cases this can lead to mould growth. Strong smells can also be created during cooking and these can spread throughout the dwelling. Cooking oils may be vaporised when frying and this oil can be deposited in areas around the cooker.

The solution

When connected to an MEV or MVHR system, the Pull-out System Hood can be wired in such a way that when the hood part of the unit is pulled out the MEV or MVHR system will automatically switch to boost.

The Pull-out Hood System Hood comes with an integrated 125mm galvanised spigot to allow for connection to the MEV or MVHR system.

SELV

SELV hoods allow the distance between the hood and an electric hob to be reduced from 650mm to 550mm.

Models

Model	Stock ref
White System Hood	407509
Aluminium System Hood	407206
White SELV System Hood	474790
Aluminium SELV System Hood	474791

Dimensions (mm)

TOP

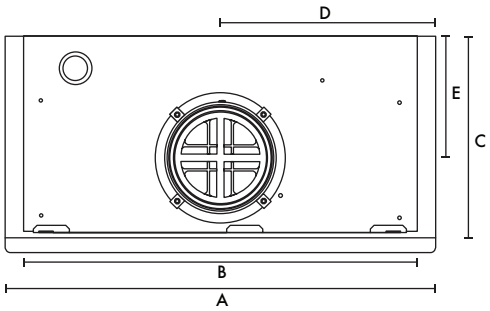

SIDE

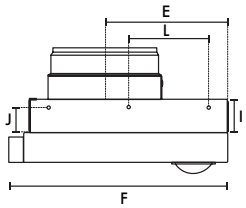

FRONT

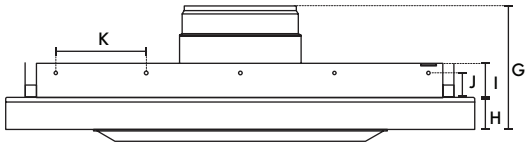

A	B	C	D	E	F	G	H	I	J	K	L
598	570	280	299	126	300	158	41	50	40	120	110

Lo-Carbon PIV Systems

For controlling condensation, the Vent-Axia Lo-Carbon PoziDry and PoziDry Pro offer a quick and simple solution. A loft mounted positive input fan, the PoziDry Pro, draws fresh air from atmosphere, filters it and pushes it into the dwelling via a ceiling mounted diffuser. Stale air in the property is forced out through the natural forms of ventilation, such as window mounted trickle vents.

For those properties that do not have a loft, Lo-Carbon PoziDry Compact provides an easy to install solution. A duct mounted unit that can be fitted in a number of locations around a single floor flat or apartment.

Vent-Axia

Lo-Carbon PoziDry Pro™
Positive Input Ventilation 114 - 115

Lo-Carbon PoziDry Compact
Positive Input Ventilation 116 - 117

Lo-Carbon PoziDry Pro™

- Anti-vibration joist mounting legs as standard
- Fully adjustable between 19l/s - 49l/s
- Smart Sense™ Technology offers simple control and data logging
- Uses latest Lo-Carbon motor technology for low running costs
- Ultra low sound level
- Complete with ceiling diffuser, flexible duct and G4 filters with F7 upgrade option
- IPX2 rated
- BBA Approved

Some parts of this product are made using recycled material therefore the colour of the plastic may vary from white to black. To find out more please visit www.vent-axia.com/sustainable

Positive Input Ventilation

Designed to prevent and treat condensation and mould quickly. The BBA approved PoziDry Pro™ is the perfect solution for general refurbishment, as its discreet, easy to install and almost silent running.

Lo-Carbon PoziDry Pro™ offers a quick and simple solution. A loft mounted positive input fan draws fresh air from the loft, filters it and gently feeds it into the dwelling via a ceiling mounted diffuser. Clean, fresh filtered air with a lower moisture content dilutes, displaces and replaces, contaminated and moisture laden air.

Installation

The Lo-Carbon PoziDry Pro™ is uniquely flexible in its installation methods, high sided anti-vibration legs and a hanging kit both come as standard, allowing the PoziDry Pro™ to be installed quickly in any sized loft. The easy carry handle incorporated into the body makes carrying the unit easy and safe; especially useful when lifting the unit through loft hatches.

The unit is supplied with a purpose designed diffuser to be located over the stairwell of a conventional dwelling, in the main hall of a bungalow, in the landing or hallway. The 4-point contact easy fit technology allows fast and repeatable 'drill free' installation.

Using Smart Sense™ Technology the unit is easily set to the appropriate speed at installation based on the size of the dwelling. Natural leakage points that are present in all dwellings, as well as purpose provided exhaust points enhances the air change. En-suites and utility areas should be serviced by continuous mechanical extract ventilation.

The PoziDry Pro™ can also be set to 'Radon' mode in properties that are affected by high radon gas levels. The unit will run continuously to ensure the constant supply of good indoor air to protect residents from harmful gases.

Performance

With a lightweight construction, the Lo-Carbon PoziDry Pro™ features a specially developed Lo-Carbon DC fan/motor arrangement which runs quietly and delivers incredibly low running costs. The Lo-Carbon PoziDry Pro™ uses a sensor to monitor the temperature in the loft, automatically adjusting the air volume when necessary. Additionally, resident comfort can be assured through an option to change the temperature at which the unit increases or decreases airflow. The unit will continuously ventilate silently in the background whilst in 'Trickle' mode. Once the unit automatically senses excess heat being lost into the loft the airflow will increase to 'Energy Recovery' mode to recover heat that would otherwise be lost through the roof. During summer months should the loft exceed 27°C (adjustable) the unit will enter 'Stand-by' mode in order stop the circulation of warm air allowing for a more comfortable living environment. PoziDry Pro™ Heater models automatically turn on the 500W heater to help take the chill off the incoming air.

Filter

Standard filters supplied with the PoziDry Pro™ are G4 (PM10 filtration) which filter out many every day pollutants such as pollen and dust. Optional F7 filters are available (PM2.5 filtration) removing tobacco smoke, diesel particulates, spores and a number of bacteria.

Data Logger

Smart Sense™ Technology allows the unit to record how long it has been running in each of its speeds. It also measures the number of days the product has been switched on to provide precise running information. Smart Sense™ Technology can also record the duration of heater activity and energy used.

Speed Control

Smart Sense™ Technology makes speed selection easy. Once house size is selected based on number of bedrooms, PoziDry Pro™ automatically selects the correct 'Trickle' and 'Energy Recovery' speeds. Should you need to adjust speed manually this can be done easily. The Smart Sense™ interface can also be locked ensuring that settings are not tampered with.

Heater

The heater model comes with a 500W heater attached to the unit. Smart Sense™ controls allow the PoziDry Pro™ to be adjusted fully when the heater is activated making it adaptable for all lifestyles.

Air Replacement Grille Set*

This set is for air replacement through doors. Consists of a two-piece telescopic set, which fits unobtrusively on either side of the door panel. Minimum fixing thickness 30mm. Plastic. Dimensions: 454 x 90mm.

*Only required if there is not a 10mm undercut on the internal doors.

Mounting Options

PoziDry Pro™ comes as standard with both high sided anti-vibration legs and a hanging kit. The legs are designed to mount between standard joist widths between 300-650mm. Clip and fit connections allow for easy installation.

Motor

The electronically controlled DC motor is manufactured with long life ball bearings and is fitted with Standard Thermal Overload Protection (S.T.O.P.). Suitable for ambient operating temperatures of -25°C to +40°C. For complete peace of mind, the Vent-Axia Lo-Carbon PoziDry Pro™ is backed by a 5 year warranty.

Discreet Diffuser

The discreet circular diffuser** is easily installed, fitted and maintained. Easy fix features it can be installed against uneven ceiling surfaces with no gaps. Its low profile and aesthetically pleasing design has been developed with tenant acceptability in mind. The Smart Air™ Technology reduces air supply noise while increasing performance by 10%. The easy clip blanking plates help to control airflow into the property.

**Diffuser will always be supplied using white plastic.

All models come with G4 filter, 2m of flexi duct and Ø200mm Diffuser. The Pozi Dry Pro ™ FD model diffuser is fire rated but does not include Smart Air™ Technology.

PoziDry Pro™
Stock Ref
476310

PoziDry Pro™ with Heater
Stock Ref
476311

PoziDry Pro FD with Heater (Multi-storey Compliant)
Stock Ref
476312

Accessories

Model	Stock Ref
Twin Spigot Kit	449071
An additional kit to allow an extra circular diffuser to be installed near the PoziDry unit. The kit includes 1 x Ø200mm 6m Duct, 2 x Worm Clips, 1 x Ø200mm Equal Y Piece and 1 x Diffuser.	
Interconnecting cable for boost switch	411150
Diffuser	478228
F7 Filter Set	477957
G4 Filter Set	477629
Air replacement grille set - Brown	561400
Air replacement grille set - Ivory	561401

Models

Dimensions (mm)

A*	B	C	D	ØE	F	G	ØH	I**
300-650	425	365	330	200	530-570	300	220	400-600

*Variable to adapt to differing joist widths. ** Variable to allow for adapting product height

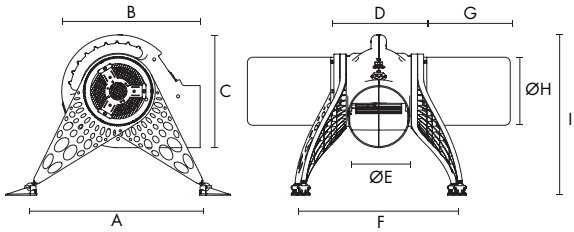

Performance Guide

	Trickle		Energy Recovery	
Bedroom	Flow Rate (l/s)	Power (W)	Flow Rate (l/s)	Power (W)
1	19	3.1	29	5.1
2	25	4.3	37	7.6
3	31	6.0	46	12.0
4	37	8.0	49	13.1
Adjustable	19-48	-	20-49	-

Lo-Carbon PoziDry Compact Pro

- Ultra small unit can fit in the smallest of spaces
- Removable inner cartridge for easy repairs and maintenance
- Flow rates adjustable in 1l/s increments, up to 30l/s
- Extremely low energy consumption
- Washable, high capacity G4 or F7 filter
- Advanced data logger and 3 digit settings lock for peace of mind
- 7 year warranty
- Ideal solution for flats with mould in a habitable room
- BBA Approved

H&V news AWARDS 2020 WINNER

Positive Input Ventilation

For those properties that do not have a loft, the Lo-Carbon PoziDry Compact Pro provides an easy to install solution. The unit has been designed to be as small as possible with multiple inlet and outlet positions allowing it to be installed in the best place every time.

Air is drawn into the Lo-Carbon PoziDry Compact Pro unit via an external inlet and through a short length of duct. The specially developed power pack cartridge assembly draws the air through an integral, high capacity, washable filter. The precision engineered scroll/impeller assembly and anti-vibration EPP body guarantees ultra low sound levels and increased energy efficiency.

The fresh, filtered airflow passes along the ducting and enters the room through a discreet grille. The rotatable integrated grille can be turned to one of 8 positions ensuring that the airflow is always directed upwards, reducing cold draughts.

The system provides fresh, tempered air into the home and creates an indoor environment where the damaging effects of condensation find it hard to exist, benefiting both the occupants and the structure of the building.

Performance

If the ambient temperature exceeds 27°C, the Lo-Carbon PoziDry Compact Pro will automatically switch off to prevent over-heating. This temperature threshold can be adjusted at installation.

In the case of the integral 300W heater version, the heater element is automatically activated when necessary and tempers the supply air to a chosen temperature.

Peace of Mind

Smart Sense™ technology records usage, energy consumption and filter life to ensure the unit has been used as intended. This is secured by an installer enabled 3 digit settings lock to make the PoziDry Compact Pro tamper free.

Model

With integral heater
Stock Ref
479188

Accessories

Model	Stock Ref
ABS Spare Cover	479843
Spare Boxing Cover	479849
Spare Boxing Cover with Grille right	479850
Spare Boxing Cover with Grille left	479851
Boxing 200mm x 200mm x 2m	479852
Boxing End Stop	479853
Boxing End Stop with Grille	479854
Boxing Inner Bend	479855
Boxing Outer Bend	479856
Silencer Kit	479857
Acoustic Flexi Duct	443273
Spare Scroll Cartridge	479859
Spare PM10 Filter	479860
Spare PM2.5 filter	479861

Dimensions (mm)

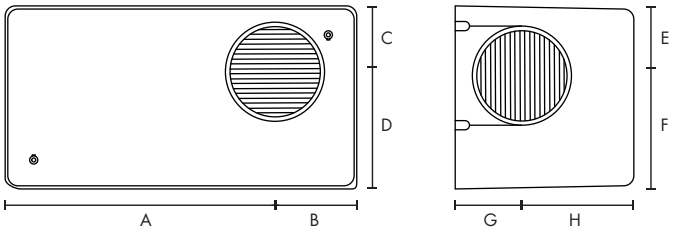

A	B	C	D	E	F	G	H	Spigot Ø	Unit Weight
302	91	74	132	79	127	75	125	100	3kg

Performance Guide

Speed	FID (l/s)	Power (W)*	No. Bedrooms	Breakout dB(A) @ 3m*
1	13	3.5	1	11.6
2	17	6.0	2	13.6
3	21	9.0	3	17.2

* Sound data is measured as breakout @ 3m assuming inlet and outlet is ducted.

Overheating Solutions

Vent-Axia has designed a range of ventilation solutions which help satisfy overheating requirements in dwellings and meet the latest Approved Document Part O requirements. Overheating in homes has been the subject of many a headline in recent years, with the UK experiencing hotter, drier summers and heatwaves.

Part O ventilation rates, should not mean nuisance noise levels. The Vent-Axia Lo-Carbon NBR Cool Unitary Fan provides heat extraction from habitable rooms whilst minimising noise. A brand new control platform provides fully adjustable airflow, meaning Part O rates can be achieved easily, with sound levels as low as 8.5dB(A) at 3 metres. The solution comes complete with a backdraught shutter to prevent nuisance draughts in habitable spaces.

Vent-Axia has also designed a complete all-in-one boxed solution to help satisfy overheating requirements in dwellings, offering 20l/s, 30l/s, and 50 l/s solutions along with passive supply replacement air options for higher flow rates. The NBR Coolbox Kit range achieves low sound levels by utilising energy efficient Mixed Flow In-Line fans that are now quieter, two and half times the pressure of conventional axial fans and more compact than traditional inline fans making them ideal for overheating extraction.

Vent-Axia®

Lo-Carbon NBR Cool Unitary Fan 120 - 121

NBR CoolBox Kits 122 - 125

Lo-Carbon NBR Cool Unitary Fan

- Designed and manufactured in the UK
- Unitary solution to help combat overheating in dwellings
- On-demand overheating extraction
- Sound levels complying with Part F building regulations
- Easy to commission with variable speed
- Local room control or automatic temperature sensor
- Passive Supply replacement air kit available when extract totals > 60l/s

Lo-Carbon NBR Cool Unitary Fan

Part O ventilation rates, should not mean nuisance noise levels. The Vent-Axia Lo-Carbon NBR Cool Unitary Fan, in 125mm, provides adequate ventilation whilst minimising noise.

The fan is designed in line with the Approved Document F and O 2021 Building Regulations.

The Lo-Carbon NBR Cool Unitary Fan has been designed to extract heat as and when the occupant needs heat extraction. As standard the Lo-Carbon NBR Cool Unitary Fan is set to run at 20 l/s which is adjustable.

The Lo-Carbon NBR Cool Unitary Fan also comes with the additional option of automatic temperature control, this would be triggered when the sensor reads 24 degrees or above.

A brand new control platform also provides fully adjustable airflow, meaning Part O rates can be achieved easily.

The solution comes complete with backdraught shutter to prevent nuisance draughts in habitable rooms.

Near Silent Operation

The fan has been designed to be as discreet as possible for homeowners, with independently tested sound levels as low as 8.5dB(A).

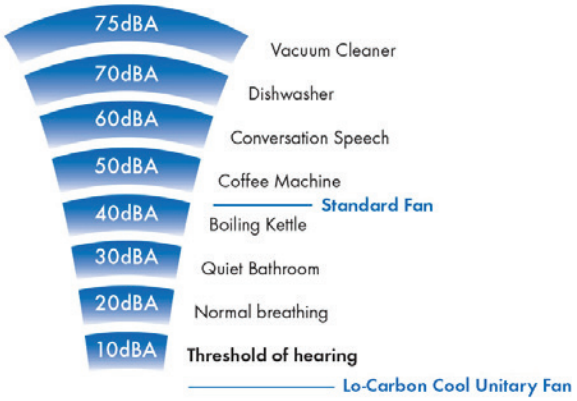

Model

Lo-Carbon NBR Cool Unitary Fan

For habitable rooms such as bedrooms and living rooms, our new 125mm heat extraction fan is the solution for developers with overheating issues. With a built-in temperature sensor as standard, automation or manual control are both an option.

Variable speed setting.

Model	Stock Ref
Lo-Carbon NBR Cool Unitary Fan	412262

Accessories

Model	Stock Ref
Wall Kit White 125mm	455226
Wall Kit Brown 125mm	497434
Wall Kit Terracotta 125mm	497432
NBR Passive Duct Kit	412261

Consultant Specification

The unitary overheating extract ventilation unit shall be the Lo-Carbon NBR Cool Unitary Fan as manufactured by Vent-Axia, exact unit sizing and specification shall be in accordance with the particular specification.

The Lo-Carbon NBR Cool Unitary Fan has been sized to meet the Part O extraction rates of up to 26 l/s, by default this is set to 20 l/s with manual control but this can be set to trigger at 24deg automatically through the built-in temperature sensor. Supplied with a 5 - year warranty.

The Lo-Carbon NBR Cool Unitary Fan should have variable speed settings of 5-26 l/s achieving a minimum noise level of 8.5dB(A) at 3 metres. All sound pressure levels are quoted at hemispherical measurements. All units shall be and independently third-party tested at the Sound Research Laboratory (SRL), tested to BS EN 13141-6.

The unit shall comprise a single high efficiency EC/DC motor to deliver specific fan powers as low as 0.09 W/l/s, as measured in accordance with the SAP PCDB test method and listed on the PCDB database.

The controls for the Lo-Carbon NBR Cool Unitary Fan unit shall provide fully adjustable, intermittent heat extraction rates. The Boost speed shall be activated via an integral temperature sensor or via LS Input.

The fan shall be compatible with low ceiling voids and have a spigot length of 66mm.

The unit should be commissioned as an Intermittent Heat Extraction fan based on the design duty required. By default this is 20 l/s.

Dimensions (mm)

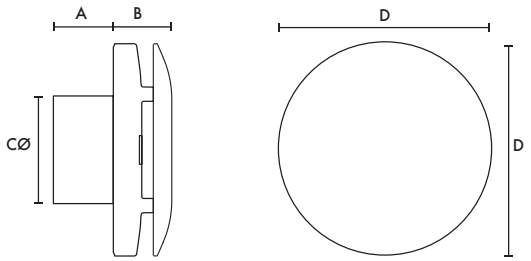

A	B	CØ	D
66	57	120	228

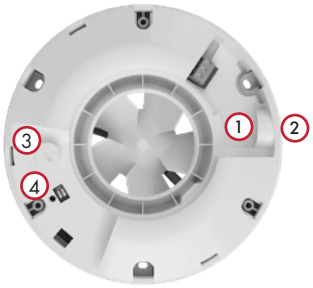

1. Rear cable entry
2. Side cable entry (cut plastic side wall to access)
3. 100% variable speed adjustment
4. Installation mode (SW1) Back pressure detection system (SW2)

Performance Guide

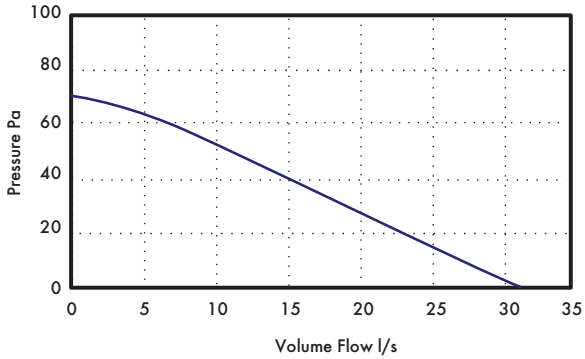

Sound

Speed	dB(A)
Min	8.5
Max	37.9

Installation Settings

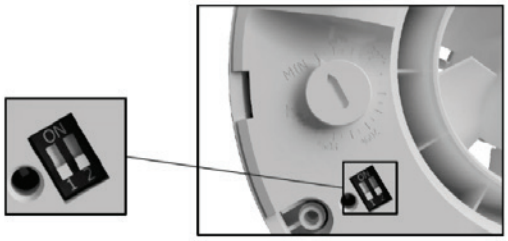

Dip Switch (SW1) (default OFF):

- OFF = Automatic Temperature Function Off (default)
- ON = Automatic Temperature Function On

NBR CoolBox Kits

- Designed and manufactured in the UK
- Fully boxed solution to help combat overheating in dwellings
- On-demand overheating extraction.
- Sound levels complying with Part F Building Regulations
- 20l/s, 30l/s, and 50 l/s solutions
- Passive supply replacement air option
- Local room control via remote switches or in room temperature sensors (by others)
- Easy to commission with predetermined speeds

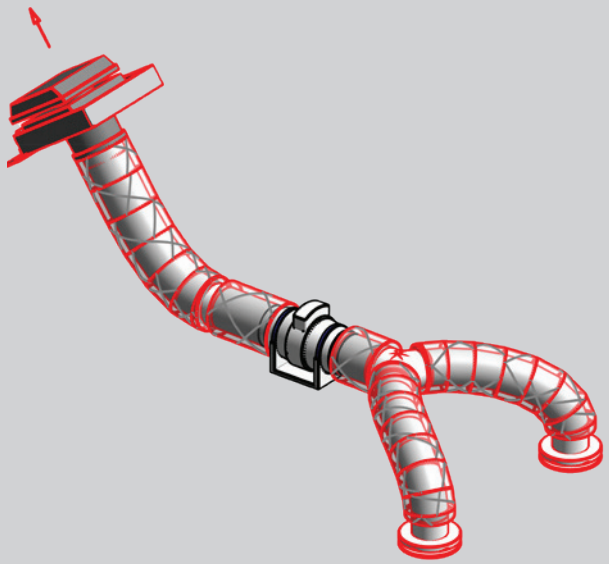

Ducted Ventilation

Vent-Axia has designed a complete all in one boxed solution to help satisfy overheating requirements in dwellings, whilst achieving low sound levels with a range of kits that include energy efficient Mixed Flow In-Line fans that are now quieter, offer two and half times the pressure of conventional axial fans and are dimensionally more compact making them ideal for overheating extraction.

Motors

The motor speed is selected on installation as per the Installation Guidance Sheet, motors are fitted with Standard Thermal Overload Protection (S.T.O.P.). All sizes with capacitor run motors. All sizes are Class II appliances. Supply voltage 220-240V/1/50Hz.

Installation

These units have a separate footplate for simple mounting and detachable spigots for simple connection to ducting. The motor body chassis rotates to provide connection in acute spaces. Cleaning the product is simple as all parts can be removed without removing the ducting.

Models

Coolbox kits

Coolbox Inline Fan with Acoustic Mat, Insulated Ducting, Acoustic Flexible Duct, Worm Drive Clips, Backdraught Shutter, Y-Piece (30 and 50 Kits only), Extract Diffuser and Roof Termination by others.

Model	Stock Ref	Airflow
NBR CoolBox 20	412258	20l/s
NBR CoolBox 30	412259	30l/s
NBR CoolBox 50	412260	50l/s

Passive kit

Insulated Flexible Duct 3m, Backdraught Shutter, Reducer, Supply Diffuser, Worm Drive Clips and Roof Termination by others.

Model	Stock Ref	Airflow
NBR Passive Duct Kit	412261	>60l/s

Dimensions (mm)

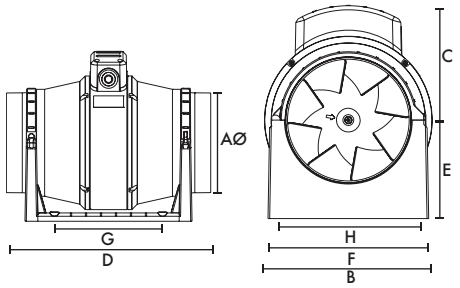

Model	NBR CoolBox 20/30	NBR CoolBox 50
AØ	122	147
B	178	200
C	124	138
D	259	350
E	96	118
F	168	192
G (fixing hole)	120	162
H (fixing hole)	153.5	178

Sound Data and Performance Guide

The sound data is based on the kits provided and an external roof vent supplied by others that conforms to at least 90% effective free area of the size of duct being used.

This equates to ≥ 15,537mm^2 for the NBR CoolBox 50/Passive Duct kit and for the NBR CoolBox 20/30 ≥ 11,039mm^2. The pressure of the roof vent must not exceed more than 5pa for the NBR CoolBox 50/Passive Duct kit and must not exceed more than 5pa for the NBR Coolbox 20/30 to provide the below sound levels and assurances of flow rate at the valve.

Sound Data and Performance Guide

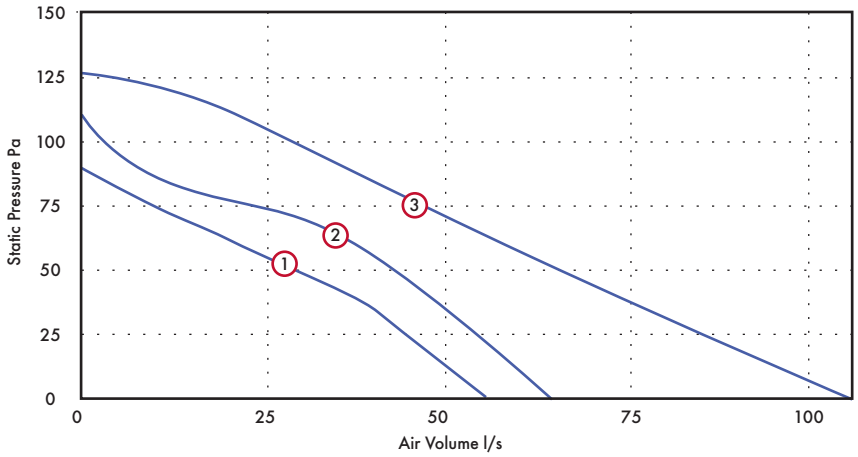

Model	Stock Ref	Flow Rate l/s	Dia mm	Speed	IP Rating	Curve Ref	Motor kW	F.L.C Amps	Estimated noise at 3m valve/s dB(A)
NBR CoolBox 20	412258	20	125	Low	IP44	1	0.03	0.12	25
NBR CoolBox 30	412259	30	125	Medium	IP44	2	0.03	0.12	22
NBR CoolBox 50	412260	50	150	Low	IP44	3	0.05	0.21	30
NBR Passive Duct Kit	412261	>60	150	n/a	n/a	n/a	n/a	n/a	n/a

Installation Examples

NBR CoolBox 20

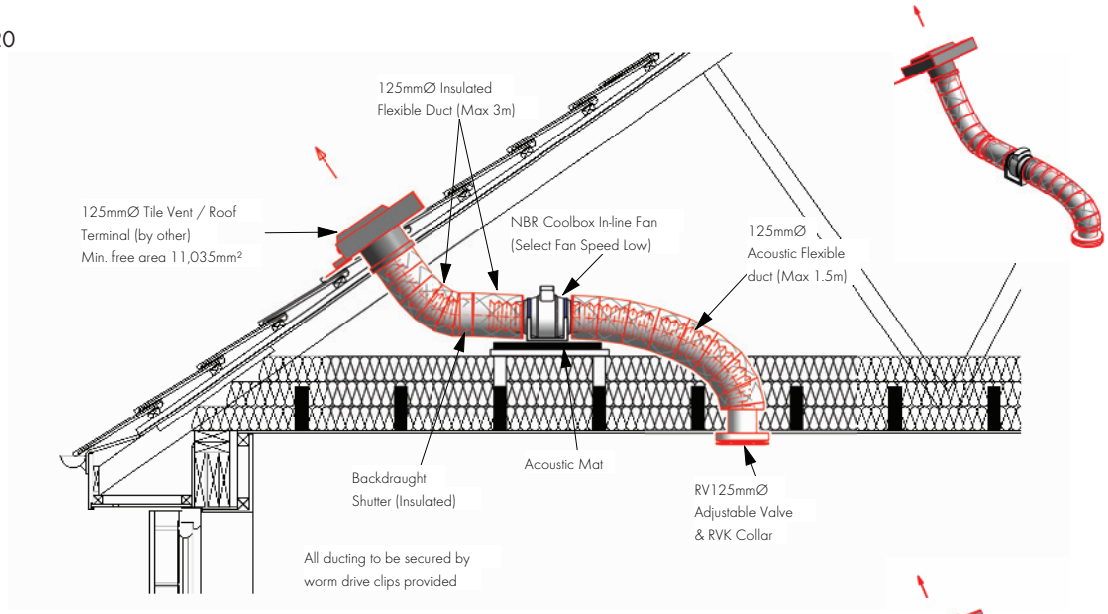

NBR CoolBox 30

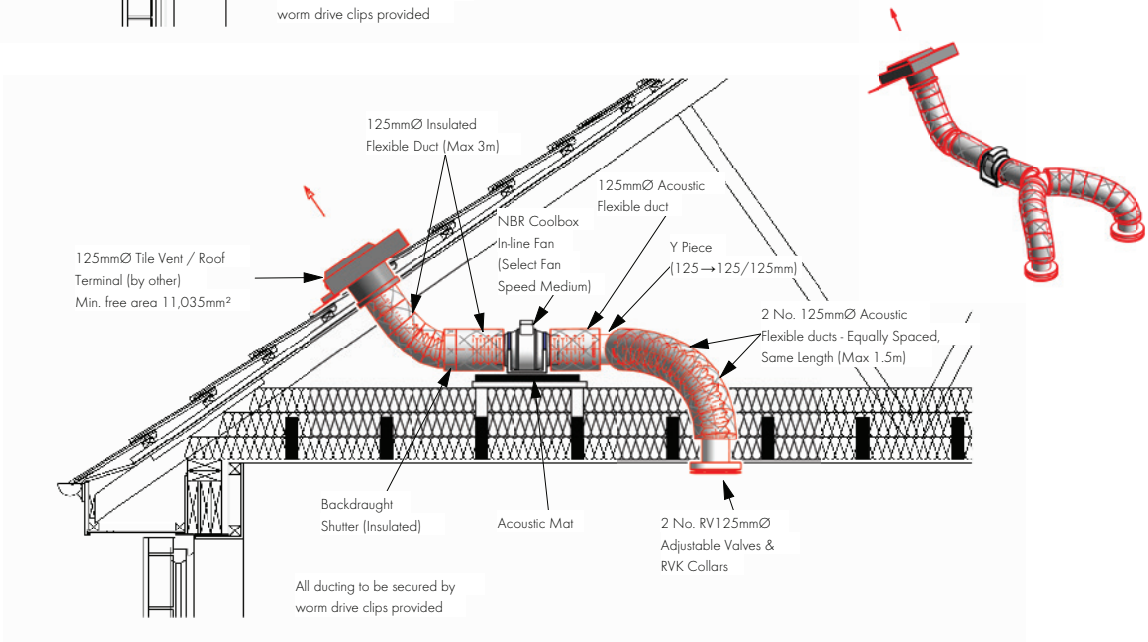

Installation Examples

NBR CoolBox 50

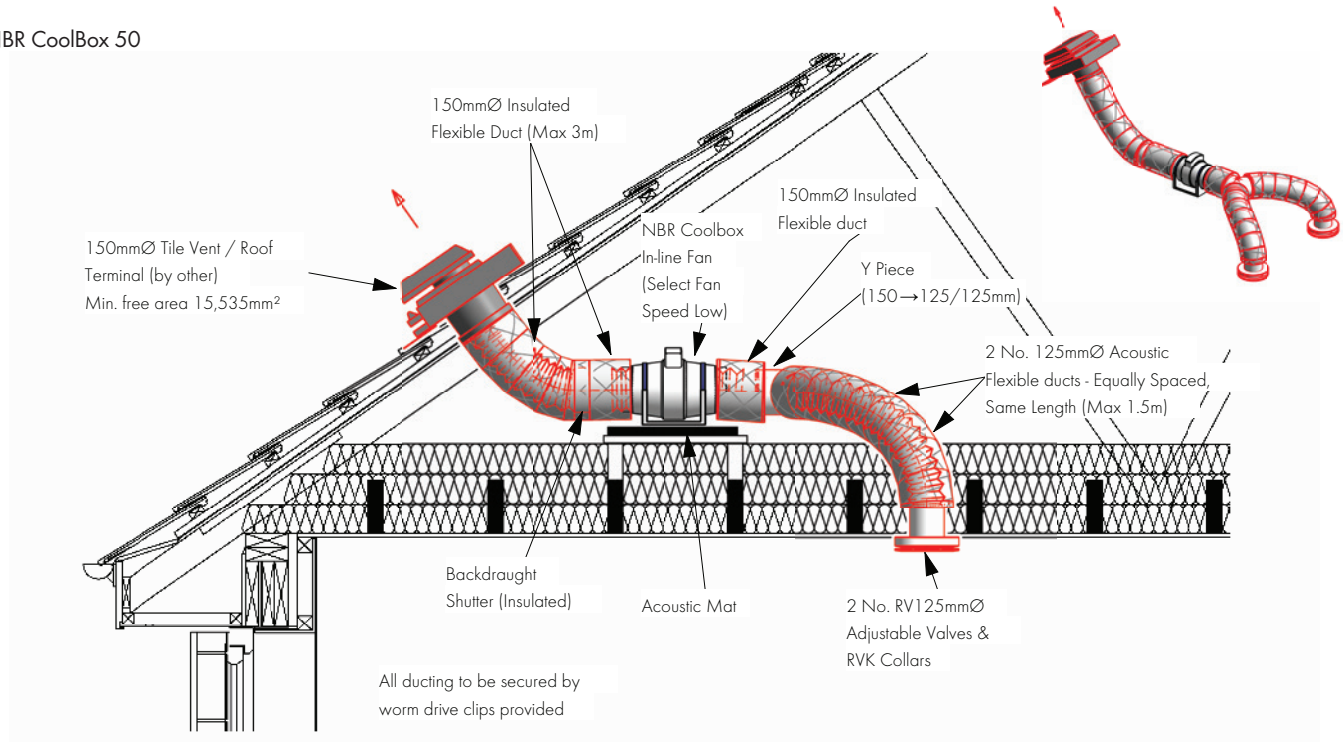

NBR Passive Duct Kit

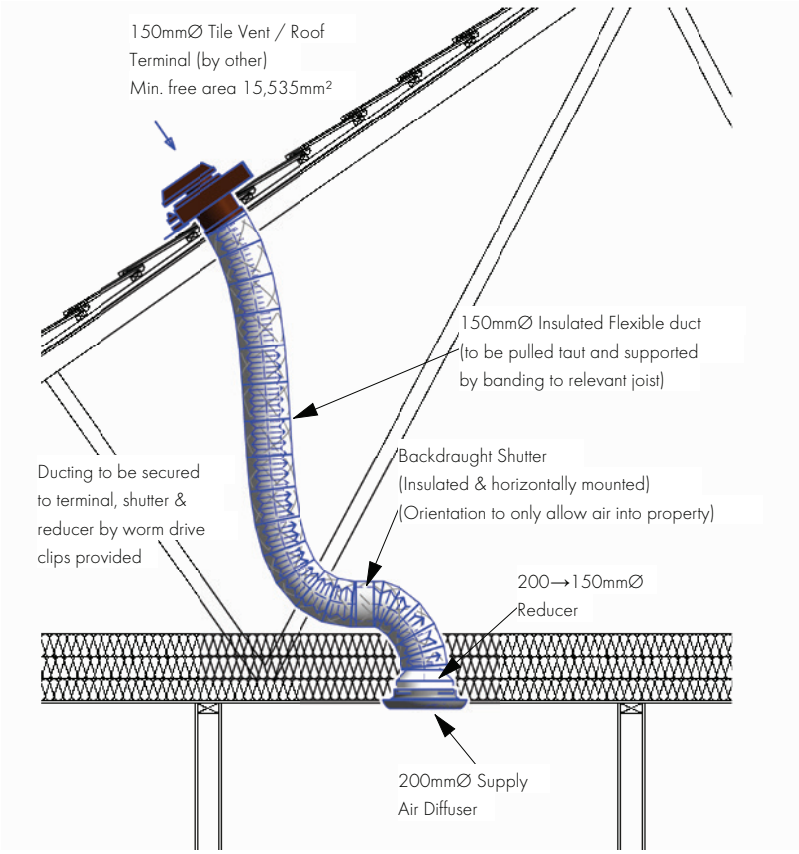

Wiring Diagram

WARNING: THE FAN AND ANCILLARY CONTROL EQUIPMENT MUST BE ISOLATED FROM THE POWER SUPPLY DURING THE INSTALLATION / OR MAINTENANCE.

THE FANS ARE DOUBLE INSULATED AND CARRY A ⧈ MARK. THERE ARE NO EARTH TERMINALS AND THESE FANS MUST NOT BE EARTHED.

1. Remove terminal box cover & screws and put to one side (Fig. 1)
2. Follow the wiring diagram (Fig. 2).
3. Check all connections have been made correctly and ensure all terminal connections and cable clamps aresecurely fastened. (Fig 3)
4. The cable entry must be made using the cable grommet provided
5. Replace terminal box cover & screws (Fig. 4)
6. Ensure the impeller rotates and is free from obstructions.

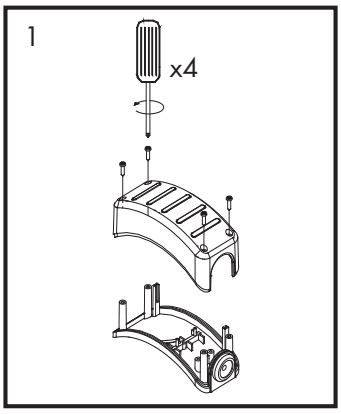

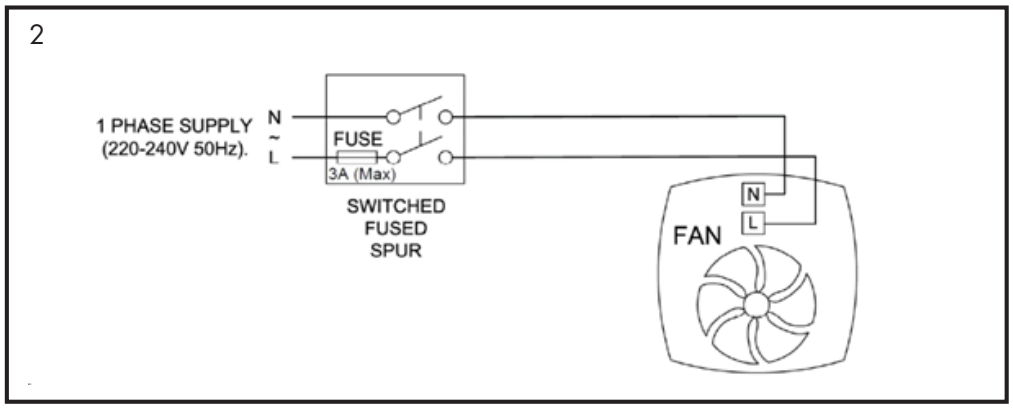

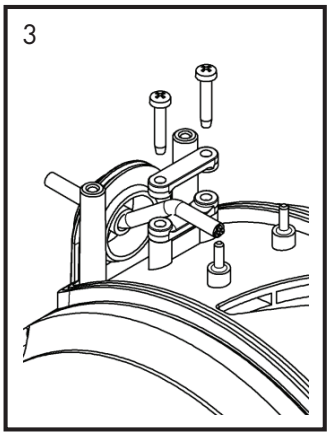

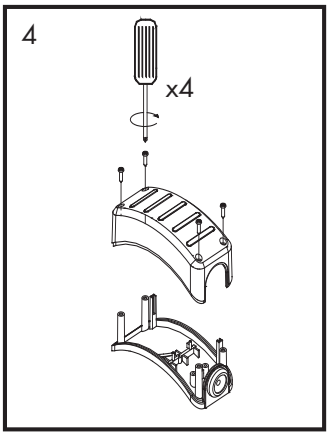

Ducting, Attenuators, Filters and Fittings

Since 1936, Vent-Axia has been known for providing a complete ventilation solution. This has not changed, and now we offer one of the widest ranges of ancillaries available today.

Vent-Axia

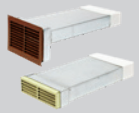
A1 Fire-Rated Ducting Kit 128 - 129

Uniflexplus+ RV Adjustable Valve 130 - 131

Vent-Axia Pure Air
NOX Filtration System, PM10 & PM2.5 132 - 133

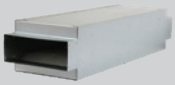
Whole House Attenuators 134 - 135

Universal Roof Vents 136

Pull-out System Hood 137

Arterial Duct System 138 - 139

Uniflexplus+ Semi-Rigid Duct System 140 - 141

Internal Fit Wall Kit 142

Low Resistance Inlet/Outlet Air Brick 143

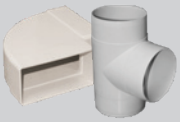
Ducting & Accessories 144 - 151

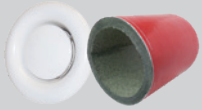
Fire Stopping – Round and Flat Ducting 152

A1 Fire-Rated Ducting Kit

- "Telescopic" grille, providing flexibility during installation, accommodating variations is facade
- Built-in weather protection with angled grilles to promote run off
- Precautionary drainage holes
- Compliant with Approved Document B
- Compliant with Building (Scotland) Technical Handbook 2019
- Available in a choice of styles to suit new build and retrofit projects

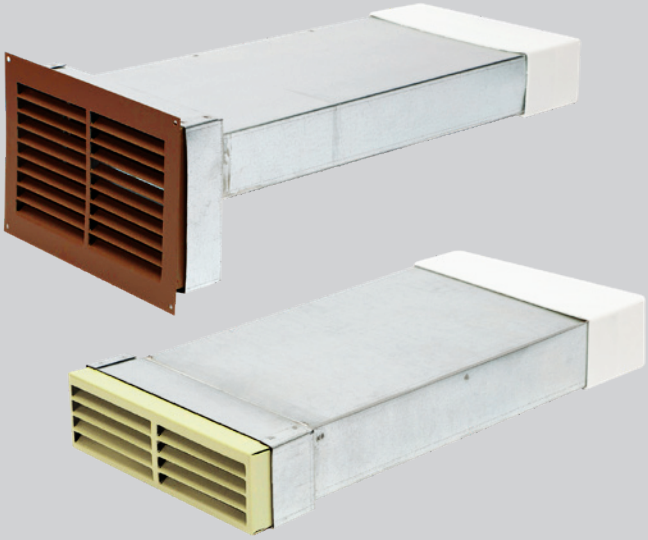

Fire rated ductwork improves the safe operation of ventilation systems by minimising the chance of fire spread. Effective fire resilient insulation acts as a barrier between ducts, to slow down or prevent the passage of flames and smoke around the building.

A1 Fire-rated metal ducting kits, delivered as one piece, to allow for ease of installation, saving time on site. Perfect for multi-storey developments which require all materials forming part of the external wall to be made from non-combustible materials.

Models

A1 Fire-rated ducting kit 204x60

Model	Colour	Stock Ref.
Single Grille	Terracotta RAL 8004	498264
Single Grille Flanged	Terracotta RAL 8004	498265
Double Grille	Terracotta RAL 8004	498266
Double Grille Flanged	Terracotta RAL 8004	498267
Single Grille	Cotswold Stone RAL 1001	498270
Single Grille Flanged	Cotswold Stone RAL 1001	498271
Double Grille	Cotswold Stone RAL 1001	498272
Double Grille Flanged	Cotswold Stone RAL 1001	498273

A1 Fire-rated ducting kit 220x90

Model	Colour	Stock Ref.
Double Grille	Terracotta RAL 8004	498268
Double Grille Flanged	Terracotta RAL 8004	498269
Double Grille	Cotswold Stone RAL 1001	498274
Double Grille Flanged	Cotswold Stone RAL 1001	498275

Performance

Single Grille

Model Range	l/s	Pressure (Pa) Supply	Extract
Single Grille	10	0.17	0.17
	20	0.8	0.18
	30	9	5
	40	25	17
	50	39	22
	60	60	38
	70	92	50
	80	125	77
	90	-	99
	100	-	112

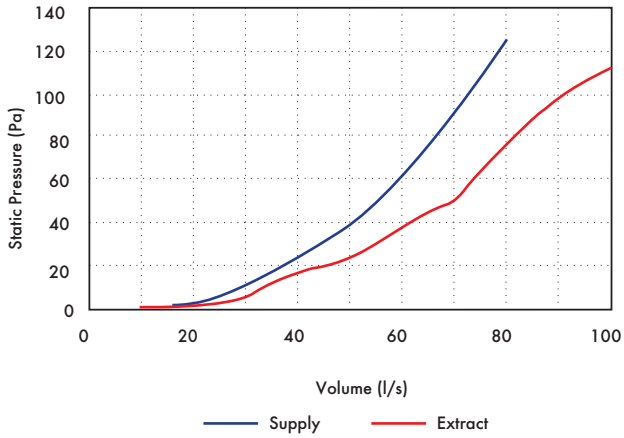

Double Grille

Model Range	l/s	Pressure (Pa) Supply	Extract
Double Grille	10	0.16	0.14
	20	0.19	0.146
	30	0.33	0.146
	40	3.18	1.48
	50	7.9	4
	60	12.35	7.5
	70	16.28	9.9
	80	28	15
	90	36	21
	100	43	25
	110	50.9	30
	120	58	42

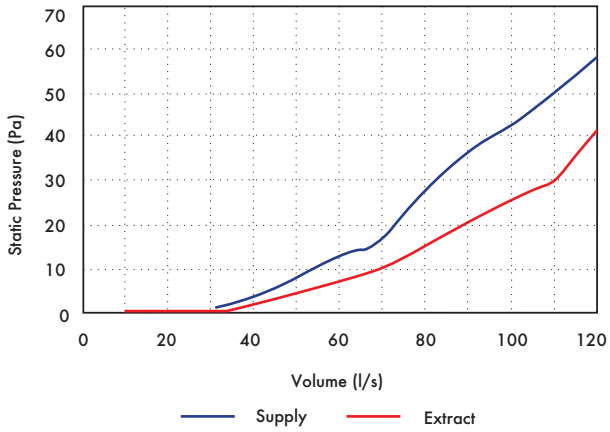

Dimensions (mm)

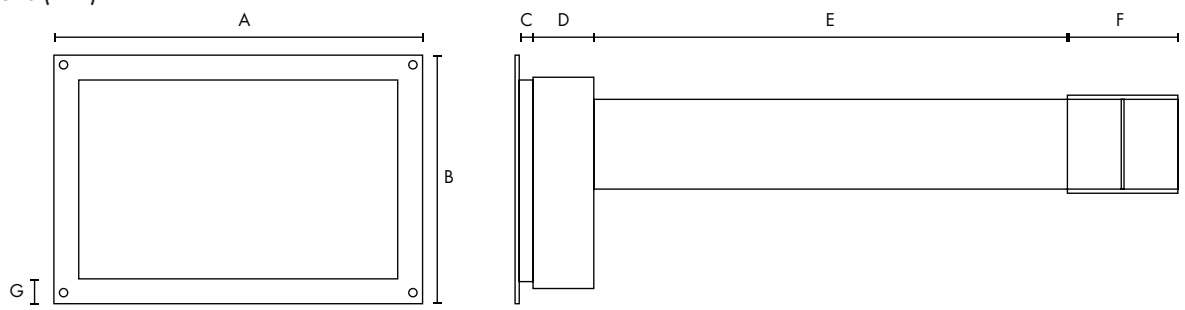

Model	Duct Size	A	B	C	D	E	F	G
Double Grille Flanged	204 x 60 / 220 x 90	245	165	10	40	276	74	15
Double Grille	204 x 60 / 220 x 90	220	141	10	40	276	74	-
Single Grille Flanged	204 x 60 / 220 x 90	245	90	10	40	276	74	15
Single Grille	204 x 60 / 220 x 90	220	66	10	40	276	74	-

Uniflexplus+ RV Adjustable Valve

- One valve for air supply and extraction: suitable for up to 21l/s
- Easy to adjust: 26 lockable positions for setting the air volume
- Excellent performance: the lowest noise and pressure drop values
- Same appearance for each volume of air: external dimensions stay the same irrespective of the selected setting
- Low turbulence airflows: prevents accumulation of dirt around the valve
- Flexible installation for all types of air ducts with connection Ø116 or Ø125
- Easy to clean: no need to remove the valve base
- Multiple designs available to suit various interior styles

Adjusting and locking

The Uniflexplus+ air distribution system has been designed to make installing and adjusting ventilation as quick and as easy as possible. With the Uniflexplus+ RV adjustable valve, the supply and extraction of air can be set and locked at fixed volumes in an instant.

The Uniflexplus+ RV is easy to install, even in suspended ceilings (with the aid of the special collar). The valve is also easy to maintain, as the base of the valve does not need to be removed from the ceiling. The air volume is adjusted entirely in the interior of the valve. This means that the external dimensions – and therefore the appearance – of the valves are always the same.

Airtight and quiet

Uniflexplus+ is well known for its airtight connection without the use of mounting aids. Uniflexplus+ RV combines this with unique noise performance levels. Thanks to very low resistances, it is possible to meet the highest requirements in terms of comfort. If necessary, 120° of the supply/extraction opening can be blocked. In addition, the adjustable valve contains antistatic and antibacterial additives and is UV-resistant.

Different versions

A great deal of attention has been devoted to the design of the adjustable valve and the materials used in it. It has an elegant appearance, with three different designs to suit various interior styles (RV 125, RVG 125 & RVV 125).

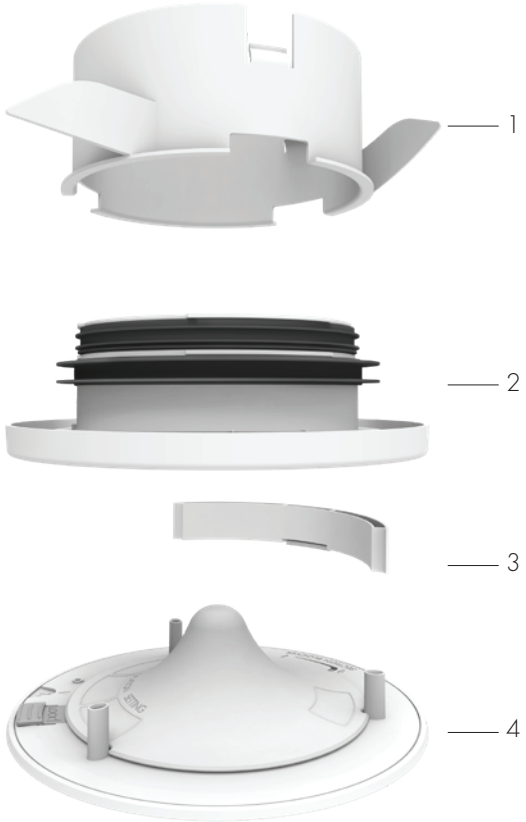

1. Collar (Accessory: RVK)
2. Base
3. Blanking plate (Accessory: RVB)
4. Regulating cone

Models

Adjustable Round Valve
Model
RV 125

Stock Ref
479372

Adjustable Round Valve Large
Model
RVG 125

Stock Ref
479373

Adjustable Square Valve
Model
RVV 125

Stock Ref
479374

Accessories

Collar
Model
RVK

Stock Ref
479376

Blanking Plate*
Model
RVB

Stock Ref
479377

*Not suitable for RVV 125 model

Specification

Model	Weight (g)	Colour	Material
RV 125	230	RAL 9003	ASA
RVG 125	410		ASA, powder-coated ALU
RVV 125	450		

Dimensions (mm)

Front view
RV 125 / RVG 125

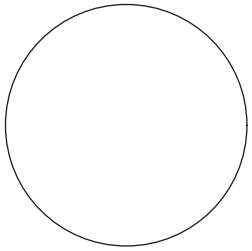

RVV 125

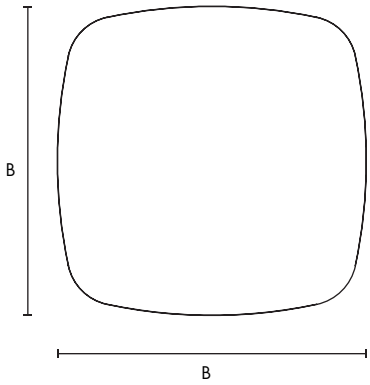

Side view
(Based on drawing of RV 125)

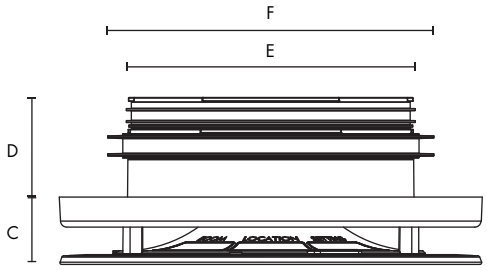

AØ	B	C	D	EØ	FØ
170/215	215	27	40	116	125

Acoustic Residential Purge Ventilator

- Rapid local extract
- Satisfies Part F purge requirements
- Acoustically treated for low noise
- Helps to reduce overheating
- Can be used in conjunction with MVHR and MEV units or as standalone system
- 220x90 or 250 diameter spigots
- Low profile design
- Easy setup
- Energy efficient EC fan
- Variable speed control
- Low maintenance requirement

The Vent-Axia Acoustic Purge Fan is used to rapidly remove indoor pollutants as well as reducing the impact of overheating in residential dwellings, providing a more comfortable and healthy internal environment for home-owners.

The Acoustic Purge Fan can be used in conjunction with a Sentinel Kinetic MVHR unit or independently via a separate switched live connection or 0-10V external sensor input. The Acoustic Purge Fan can be installed in habitable rooms to satisfy Approved Document F Purge requirements (4 air changes per hour). The unit can be installed in conjunction with controllable duct dampers and/ or background ventilators to manage the supply air into the dwelling under purge operation.

The Acoustic Purge Fan is specially treated with acoustic foam to reduce breakout and induct noise, ensuring end-user comfort during operation. As well as boasting a low-profile design, the unit utilises 220x90 spigots to allow easy use of flat ducting in tight void spaces in apartments.

Model

Model	Stock Ref
Acoustic Purge Fan	477988
Acoustic Purge Fan XL	479829

Accessories

Model	Stock Ref
Remote Speed Control	10520602
Trickle/Boost Controller	475775

Dimensions (mm)

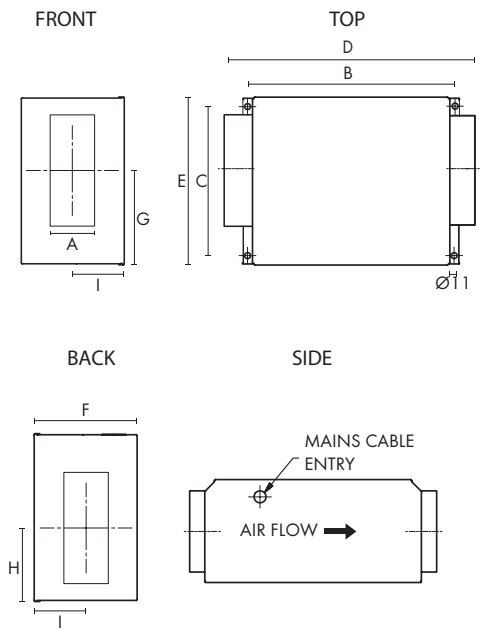

Stock Ref	Spigot	A	B	C	D	E	F	G	H	I	kg
477988	220x90	85	380	275	456	310	191	165	145	103.5	7.5
479829	250Ø	250	435	330	511	364	287	182	122	143	13

Performance

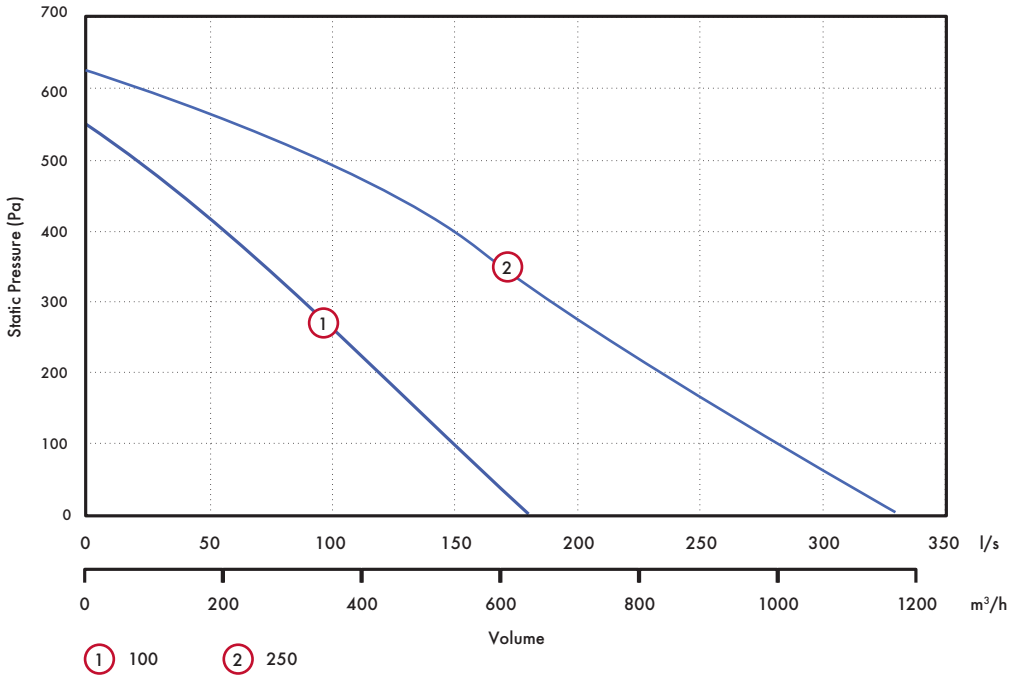

Sound Data

Acoustic Purge Fan

Speed	Test mode	63	125	250	500	1k	2k	4k	8k	LwA	dB(A) @ 3m
		Octave Band (Hz) Sound Power Levels, dB									
25%	Inlet	35	30	34	32	26	20	18	24	32	15
	Outlet	36	32	36	34	33	28	20	23	37	19
	Breakout	37	34	31	28	24	18	18	23	30	10
50%	Inlet	40	38	51	47	41	38	31	26	48	31
	Outlet	40	44	57	51	50	49	43	31	56	38
	Breakout	43	46	50	46	43	39	32	27	48	27
80%	Inlet	45	45	60	60	52	49	44	40	59	42
	Outlet	50	50	68	65	61	61	56	49	68	50
	Breakout	64	53	57	58	54	50	47	45	59	39
100%	Inlet	55	46	60	61	53	50	45	41	60	43
	Outlet	53	51	65	66	62	63	57	51	68	51
	Breakout	56	54	57	60	56	52	49	47	61	41

Acoustic Purge Fan XL

Speed	Test mode	63	125	250	500	1k	2k	4k	8k	LwA	dB(A) @ 3m
		Octave Band (Hz) Sound Power Levels, dB									
25%	Inlet	48	49	42	38	35	24	24	29	40	22
	Outlet	47	46	41	37	41	29	24	29	42	24
	Breakout	42	42	37	31	29	26	25	31	40	19
50%	Inlet	55	57	65	58	49	43	45	38	57	39
	Outlet	53	57	62	58	54	55	51	36	59	41
	Breakout	52	48	53	43	37	36	34	30	48	27
80%	Inlet	63	65	69	76	62	54	53	49	71	53
	Outlet	63	66	69	72	69	68	62	55	72	54
	Breakout	54	56	57	57	48	46	45	36	57	36
100%	Inlet	68	71	72	80	68	62	59	56	76	58
	Outlet	68	71	70	78	75	75	68	63	78	60
	Breakout	61	63	62	62	55	54	52	45	63	42

Wiring Diagram

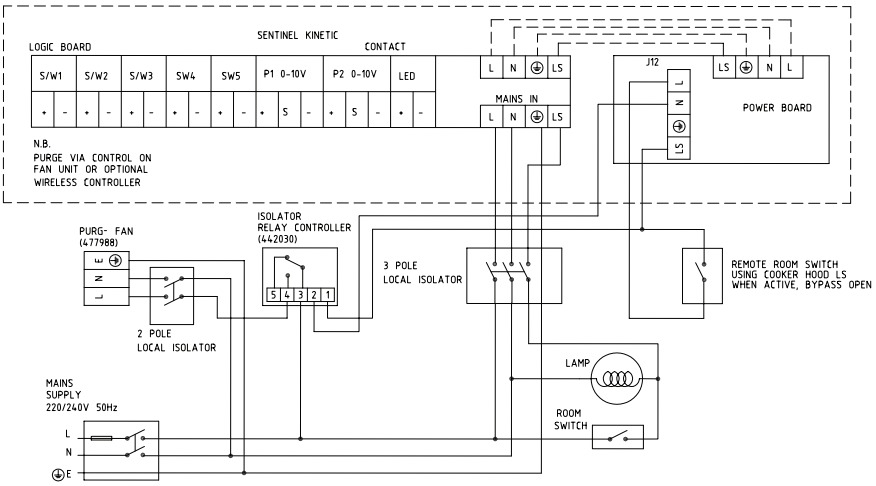

Vent-Axia Pure Air

- Removes NOX and other gases
- Removes particles down to PM2.5
- Offers multiple spigot options
- Low pressure drop
- Easy to install with mounting brackets
- Conforms to international air quality guideline limits
- Easy installation & maintenance
- Various sizes to suit residential or commercial applications
- Provides induct noise attenuation
- Insulating jackets available
- New compact unit available

What is it?

The Vent-Axia Pure Air combines particulate and gas filters to remove pollutants prior to entering residences and commercial buildings through mechanical ventilation and heat recovery systems. The Vent-Axia Pure Air is designed to bring outdoor air pollutant levels within the guideline exposure limits as set out in the World Health Organisation Air Quality Guidelines and the CAFE Directive prior to entering an occupied space.

Indoor air quality (IAQ) is becoming increasingly important with properties being built in urban, industrialised areas. The Vent-Axia Pure Air offers a complete filtration solution with a range of specifiable products that meet planning obligations and refine traditional filtration, leaving home owners with confidence in their heat recovery systems.

What does it do?

The Vent-Axia Pure Air sets the benchmark for high level filtration. It targets pollutants generated outside of the home, by traffic and industrial processes, and reduces these before supplying the air into the dwelling.

The Vent-Axia Pure Air filter is fitted to the intake airflow and incorporates two types of filtration:

- Enhanced activated Carbon which removes unpleasant odours and harmful gasses such as Nitrous Oxide (NO_2).
- ISO 65% Coarse (G4) or ePM2.5 (F7) particulate filters which can remove tiny airborne contaminants such as pollen, bacteria and even PM2.5 diesel particulates.

The combination of MVHR and Vent-Axia Pure Air filtration offers the ideal indoor environment.

Unit Specification

The Vent-Axia Pure Air is manufactured from 1.2mm Galvanised Steel together with suitable sealing for particulate and gas filters. Access is available on both sides via bolted lift off panels. Various round and rectangular transformation spigots are available to suit ductwork systems for both domestic and commercial duct work.

Filter Specification

Particulates, PM10, PM2.5

A new ISO filtration standard has come into force. The test method has changed so direct comparisons between EN779 2012 and ISO 16890 cannot be drawn. Below is a guide to the filter efficiencies:

ISO 16890	EN779
45% Coarse	G3
65% Coarse	G4
ePM10 50%	M5
ePM2.5 70%	F7

Pollutant Gases, NO_2, SO_2, O_3, VOC

The gas stage filters in the Vent-Axia Pure Air are designed to achieve a minimum contact time suitable for the removal of pollutant gases at the rated airflow. A specially formulated activated carbon and chemical mix acts upon pollutant concentrations common in dirty city air, reducing them below guidelines set by current legislation.

Unit Configuration

Standard Gas Filter Unit

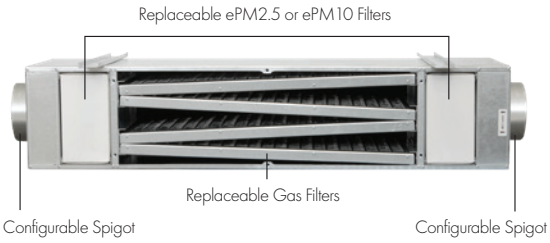

Compact Gas Filter Unit

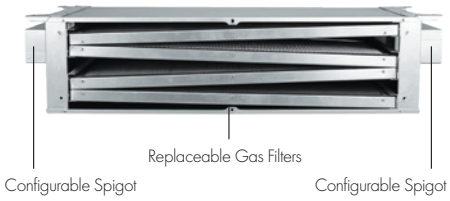

Accessories

Model	Stock Ref
Spare ePM2.5 filter	PAFIL-25
Spare ePM10 filter	PAFIL-10
Spare gas filter	PAFIL-NO2

Models

Model Range	Stock Ref	Airflow l/s	Intake Spigot (mm)*	Exhaust Spigot (mm)*	Filter Types	Clean Filter Pressure Drop (Pa)	Approximate Unit Weight (kg)
Standard Gas Filter Unit	PA50-125125-25	50	125Ø	125Ø	PM2.5	100	25
	PA50-204204-25	50	204x60	204x60	PM2.5	100	25
	PA50-125125-10	50	125Ø	125Ø	PM10	45	25
	PA50-204204-10	50	204x60	204x60	PM10	45	25
	PA100-150150-25	100	150Ø	150Ø	PM2.5	100	49
	PA100-220220-25	100	220x90	220x90	PM2.5	100	49
	PA100-150150-10	100	150Ø	150Ø	PM10	45	49
	PA100-220220-10	100	220x90	220x90	PM10	45	49
	PA200-200200-10	200	200Ø	200Ø	PM10	45	96
	PA200-250250-10	200	250Ø	250Ø	PM10	45	96
	PA300-315315-10	300	315Ø	315Ø	PM10	45	144
Compact Gas Filter Unit	PAC50-125	50	125Ø	125Ø	PM10	45	23
	PAC50-150	50	150Ø	150Ø	PM10	45	23
	PAC50-204	50	204x60	204x60	PM10	45	23
	PAC50-220	50	220x90	220x90	PM10	45	23
	PAC100-125	100	125Ø	125Ø	PM10	45	45
	PAC100-150	100	150Ø	150Ø	PM10	45	45
	PAC100-204	100	204x60	204x60	PM10	45	45
	PAC100-220	100	220x90	220x90	PM10	45	45

*Airflow may be reversed through the unit to offer alternative spigot options.

Example Stock Ref: PA 50 - 125 125 - 25

Pure Air | Litres Per Second | Intake Spigot Dia. | Exhaust Spigot Dia. | PM Filter Grade

Dimensions (mm)

PM & Gas Filter Unit

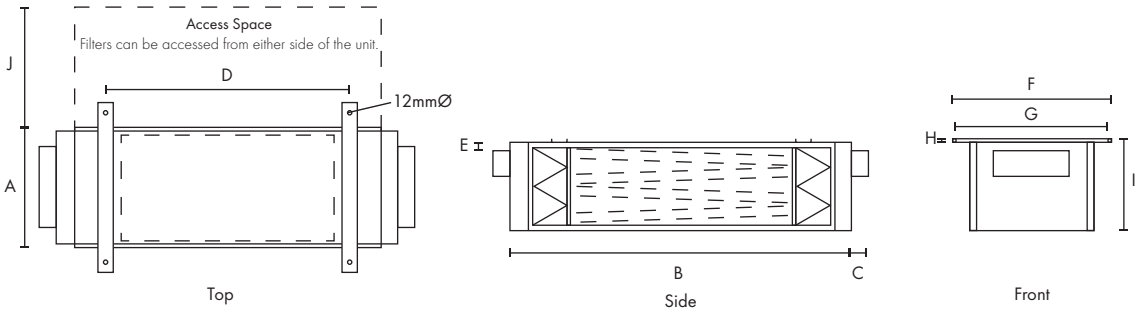

Compact Gas Filter Unit

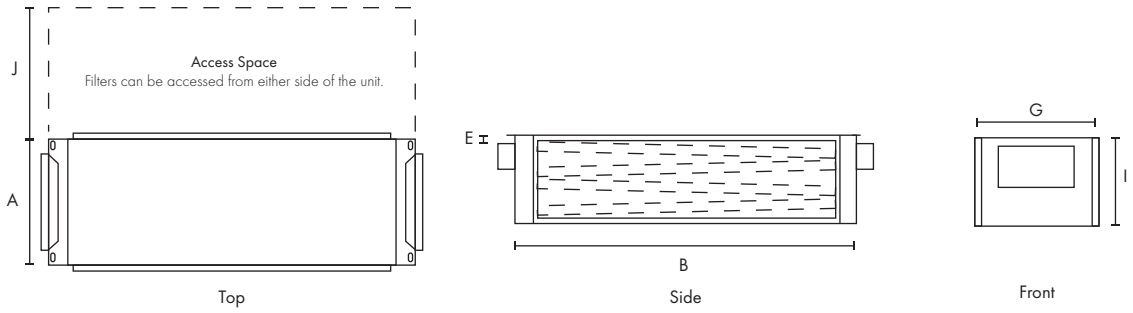

Model Range	Airflow l/s	A	B	C	D	E	F	G	H	I	J
Standard Gas Filter Unit	50	320	980	50	700	25	435	405	10	220	325
	100	620	980	50	700	25	730	700	10	220	325
	200	620	980	50	700	110/85	730	700	10	420	650
	300	620	980	50	700	160	730	700	10	630	960
Compact Gas Filter Unit	50	320	690	-	-	25	-	260	-	180	325
	100	620	690	-	-	25	-	560	-	180	325

Wholehouse Attenuators

- Reduces induct noise
- Variety of sizes to suit specified noise requirements
- Compatible with both 204x60mm² and 220x90mm² rectangular ductwork
- Central and offset spigot options to suit each installation
- Rigid galvanized steel construction
- Easy installation
- Suitable for almost any ventilation system
- Low pressure loss

The Vent-Axia Wholehouse Attenuator has been developed to reduce induct noise in both residential and commercial ducting systems.

Technical Details

The Wholehouse Attenuator is compatible with either 204x60mm² or 220x90mm² ducting. It also offers two spigot options to suit the installation and design requirements. The Wholehouse Attenuator is available with either a standard centralised spigot or, for instances when the ducting is installed flat to a concrete slab, an offset spigot. As well as saving the need for additional ducting components, this allows for a much easier and quicker installation.

Noise Reduction

Offering excellent sound reduction over a range of frequencies, the Wholehouse Attenuator is available in two lengths depending on the noise suppression requirements. For MVHR systems the attenuator can be fitted on the supply side to habitable rooms, reducing airborne in-duct noise. For MVHR and extract-only systems, the attenuator may be placed on the extract side to limit 'cross-talk' through ductwork between rooms.

Models

Attenuator with Central Spigot

Model	Stock Ref
204x60 Duct 620mm Length	477369
204x60 Duct 920mm Length	407915
204x60 Duct 1220mm Length	407916
220x90 Duct 620mm Length	477370
220x90 Duct 920mm Length	407920
220x90 Duct 1220mm Length	407921

Attenuator with Offset Spigot

Model	Stock Ref
204x60 Duct 620mm Length	477371
204x60 Duct 920mm Length	475427
204x60 Duct 1220 Length	475428
220x90 Duct 620mm Length	477372
220x90 Duct 920mm Length	475429
220x90 Duct 1220mm Length	475430

Acoustic Flexible Ducting

Model	Stock Ref
125mm∅ Duct 1m Length	443793
150mm∅ Duct 1m Length	443274

Dimensions (mm)

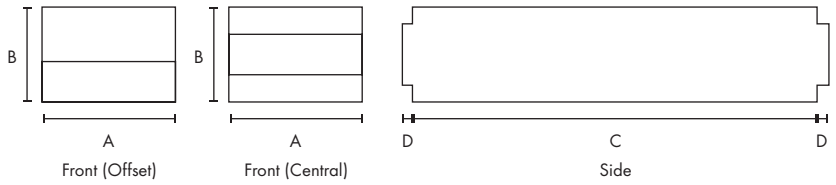

Model	Stock Ref	A	B	C	D	kg
204x60 Duct 620mm Length	477369/477371	196	125	620	50	10
204x60 Duct 920mm Length	407915/ 475427	200	120	920	50	13
204x60 Duct 1220mm Length	407916/475428	200	120	1220	50	17
220x90 Duct 620mm Length	477370/477372	207	148	620	50	10
220x90 Duct 920mm Length	407920/ 475429	210	145	920	50	14
220x90 Duct 1220mm Length	407921/475430	210	145	1220	50	17

Acoustic Performance

		Insertion Loss (dB)							
Model	Stock Ref	63	125	250	500	1k	2k	4k	8k
204x60 Duct 620mm Length/ 220x90 Duct 620mm Length	477369/477370/ 477371/477372	3	4	7	13	21	38	45	33
204x60 Duct 920mm Length	407915/475427	0.3	3.2	11.6	24.2	38	49.1	50.3	36.4
204x60 Duct 1220mm Length	407916/475428	0.3	1.8	14.1	21.3	35.4	46.9	50.4	36.4
220x90 Duct 920mm Length	407920/475429	7.3	10.2	13.1	26.2	34.9	47.6	52.2	38.9
220x90 Duct 1220mm Length	407921/475430	1.2	7.4	18.6	30.2	39.1	51	45.2	38.6
125mmØ Duct 1m Length	443793	5.5	11.5	17	19.9	19.1	25.6	20	21.6
150mmØ Flexible Duct 1m Length	443274	-1.2	10.6	19	16.8	15.7	22.2	15.7	17.6

Pressure Loss

Model	Duct Size (mm)	Volume (l/s)	Pressure Loss (Pa)
Attenuator	204x60	15	6
		30	10
		60	25
		80	41
Attenuator	220x90	15	6
		30	10
		60	22
		80	36
Acoustic Flexible Ducting (1m)	125	15	2.8
		30	8.8
		60	19.2
		80	37.5
Acoustic Flexible Ducting (1m)	150	15	1.7
		30	6.4
		60	13.8
		80	28.4

Universal Roof Vents

- Models available for both pitched and flat roof types
- Complies with Building Regulations
- Suitable for most installations
- Corrosion resistant and weather proof
- Compatible with both mechanical and natural ventilation systems
- Three colours available for pitched roof vents

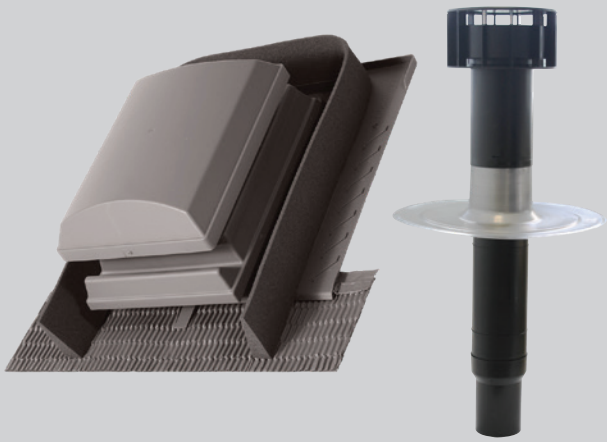

Wholehouse ventilation systems require termination to the external atmosphere, often through the roof. To ensure that the ventilation system is able to achieve its optimum level of performance, it is important that a suitable roof termination product is installed.

With this in mind, Vent-Axia is pleased to offer a range of Universal Roof Vents; including products suitable for both pitched and flat roof types.

A selection of colours and sizes should ensure that our range offers a product suitable for most residential applications with a pitched or flat roof. Pitched roof vents are available in a variety of colours as detailed in the Specification Table - custom colour and textured vents to match your exact needs are also available at an extra charge. Please contact our Technical Support team for more details.

Models

Universal Roof Vent suitable for Pitched Roofs

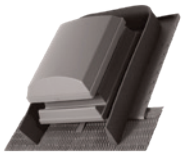

Manufactured in the UK, these products have been specifically developed for use with both natural and mechanical ventilation systems.

All models have been independently tested by the BRE to BS476 Part 3: 2004 and have been awarded an AA classification - the highest possible. Thus they can be installed without restriction on any pitched roof.

All models have low resistances to airflow (see table) and incorporate condensation grooves to prevent any condensate running back down the duct. Universal Roof Vents are designed to resist the ingress of deluge and driving rain. Universal Roof Vents (pitched roof models) are suitable for roof pitches between 20° and 60°.

The pitched roof vents are available as a 'tiled' roof vent to fit alongside most traditional roof tiles, as well as a 'slate' version which can be easily cut down to fit alongside all traditional roof slates.

Stock Ref	Tile Type	Spigot mm	Colour	Airflow Resistance (Pa) at l/s 14	28	56	83	140
407329	Universal*	125	Red	1.1	4.1	16.8	N/A	N/A
407330	Universal*	125	Brown	1.1	4.1	16.8	N/A	N/A
407331	Universal*	125	Grey	1.1	4.1	16.8	N/A	N/A
407332	Universal*	150	Red	0.3	1.0	4.2	9.5	27.4
407333	Universal*	150	Brown	0.3	1.0	4.2	9.5	27.4
407334	Universal*	150	Grey	0.3	1.0	4.2	9.5	27.4
407335	Slate	125	Slate Blue/ Black	1.1	4.1	16.8	N/A	N/A
407336	Slate	150	Slate Blue/ Black	0.3	1.0	4.2	9.5	27.4

*Universal Roof Vents are not suitable for the following tile types: Plain, Clay Single Pantiles, Forticrete Centurion, Goxhill Gaelic Tiles, Double Lap or Interlocking Slates. If the Universal Roof Vent does not meet your requirements, please contact our Technical Support team for a bespoke solution

Universal Roof Vent suitable for Flat Roofs

Capped stacks for use in asphalt and built-up felt roofs. Special low air resistance cowl - the pressure/airflow resistance is <1.0 Pascal at 63l/s. The pipework above the roofline is twin walled and incorporates an integral condensation drain. The stack pipe has an integral collar and separate aluminium flange for use with both felt and asphalt roof finishes.

All Vent-Axia Universal Roof Vents have a free area exceeding those required by Building Regulations.

Stock Ref	Colour	Free Vent Area mm²	Pressure/ Airflow Resistance	Dia. mm	Height Above Roof mm	Flange Dia. mm	Depth Below Flange mm
407337	Black	8,400	<1.0	110	300	395	350
407338	Black	12,000	<1.0	131	400	450	350
407339	Black	20,000	<1.0	166	540	450	510

Pull-out System Hood/SELV

- Models available with either a White or Brushed Aluminium trim
- Fits within a 600mm wide aperture (300mm deep)
- Complete with two low energy 9W lamps
- All models are fitted with a metal washable grease filter as standard
- 125mm galvanised duct connection piece
- Integral fire damper in accordance with BRE 398
- Weight: 3.7kg
- SELV hoods allow the distance between the hood and an electric hob to be reduced from 650mm to 550mm

Product

The Pull-out System Hood is designed to fit in a 600mm aperture above a hob. The telescopic hood incorporates two flat removable metal grease filters, two low energy light bulbs and is available with a White or Brushed Aluminium front trim.

The hood contains an integral fire damper in accordance with BRE Digest 398 and is connected to the mechanical ventilation unit by a galvanised steel duct connection piece. When the hood is opened the mechanical ventilation unit goes to boost speed.

Why install a cooker hood?

Steam created during the cooking process can cause moisture to form on walls and furniture. In extreme cases this can lead to mould growth. Strong smells can also be created during cooking and these can spread throughout the dwelling. Cooking oils may be vaporised when frying and this oil can be deposited in areas around the cooker.

The solution

When connected to an MEV or MVHR system, the Pull-out System Hood can be wired in such a way that when the hood part of the unit is pulled out the MEV or MVHR system will automatically switch to boost.

The Pull-out Hood System Hood comes with an integrated 125mm galvanised spigot to allow for connection to the MEV or MVHR system.

SELV hoods allow the distance between the hood and an electric hob to be reduced from 650mm to 550mm.

Models

Model	Stock ref
White	407509
Aluminium	407206
White SELV	474790
Aluminium SELV	474791

Dimensions (mm)

TOP

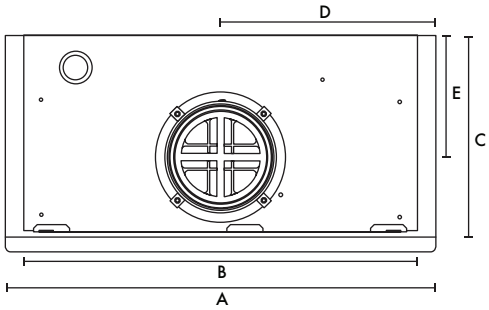

SIDE

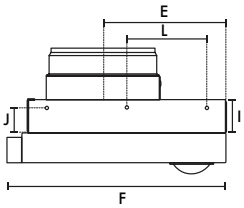

FRONT

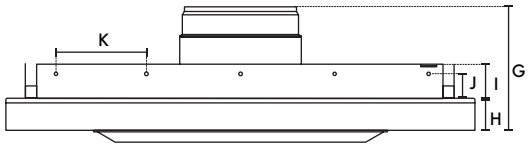

A	B	C	D	E	F	G	H	I	J	K	L
598	570	280	299	126	300	158	41	50	40	120	110

Arterial Duct System

- Reduces installation time
- Can be applied in SAP as a rigid duct system
- Crush resistant semi-rigid duct
- Unique low-resistance manifolds
- Simple installation through joists
- Smooth inner surface with antistatic and antibacterial coating
- Combines the advantages of rigid ducting with the versatility of a semi-rigid system

Arterial System

For use with MVHR systems, the Arterial air distribution system provides a flexible, highly robust solution, which can significantly reduce the installation time when compared to a standard system.

Rigid vs Semi-Rigid Systems

Both traditional duct types have limitations in modern construction. **Rigid systems:** Passing rigid duct through a floor cassette at right-angles to the joists is time consuming and multiple connections increase the risk of leaking ductwork. **Semi-rigid Systems:** It can often be difficult to accommodate two distribution boxes and multiple semi-rigid pipe runs in new buildings and the time saving advantages are soon overtaken by the additional cost of materials.

Reduced Installation Time

The Vent-Axia Arterial range combines the advantages of semi-rigid and traditional rigid ducting in one simple system. The system is independently tested and can be applied in SAP as a standard rigid system. Drops between floors to/from the MVHR unit remain in rigid PVC, having the advantage of low space usage and low cost. Traversing through joists in a floor cassette is much simpler and faster when using semi-rigid duct. The secret to the Arterial System is the unique low-resistance distribution plenum (Patent Pending) which is sited between joists allowing connection between semi-rigid and rigid sections.

100mm Elbow Bend to 90mm

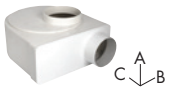

		External Dimensions (mm)		
Stock Ref	O/I Ømm	A	B	C
496741	90/78	119	226	280

Single Spigot Adaptor

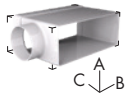

		External Dimensions (mm)		
Stock Ref	Duct Size	A	B	C
408872	220x90 to 78Ø	94	258	150

Double Connector Plate

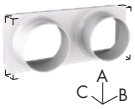

		External Dimensions (mm)		
Stock Ref	Duct Size	A	B	C
408873	220x90 to 78Ø	98	226	66

Single Connector Plate

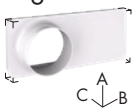

		External Dimensions (mm)		
Stock Ref	Duct Size	A	B	C
408874	220x90 to 78Ø	98	226	66

Blank Plate

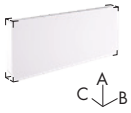

		External Dimensions (mm)		
Stock Ref	Duct Size	A	B	C
408875	220x90 to 78Ø	98	226	26

Reducer

		External Dimensions (mm)		
Stock Ref	Duct Size	A	B	C
408885	120 to 78Ø	129	105	129

Semi-Rigid Ducting

Stock Ref	O/I Ømm	Length m	Coil Ømm	Coil Height mm	kg
412607	90/78	50	1130	250	19.5
412608	90/78	25	1130	125	9.8

Complete System Setup Example

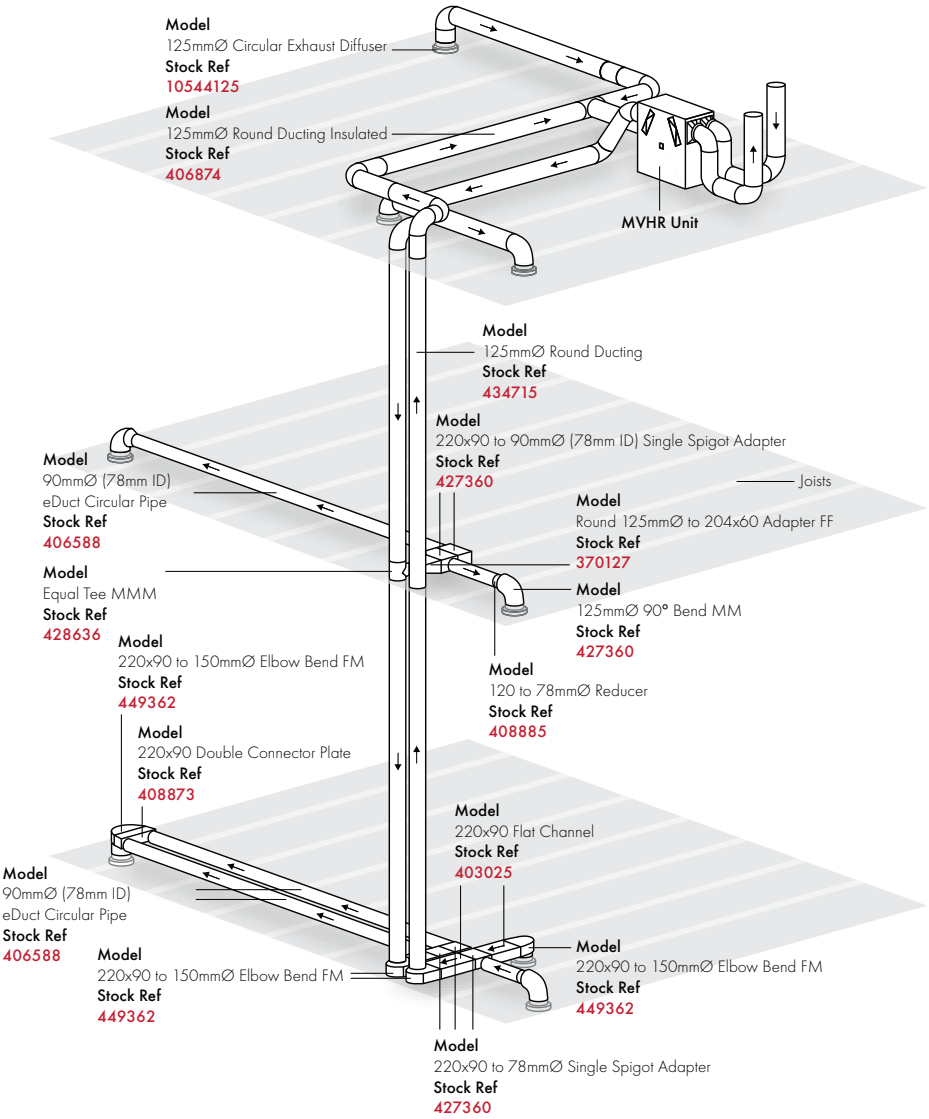

System Configuration Examples

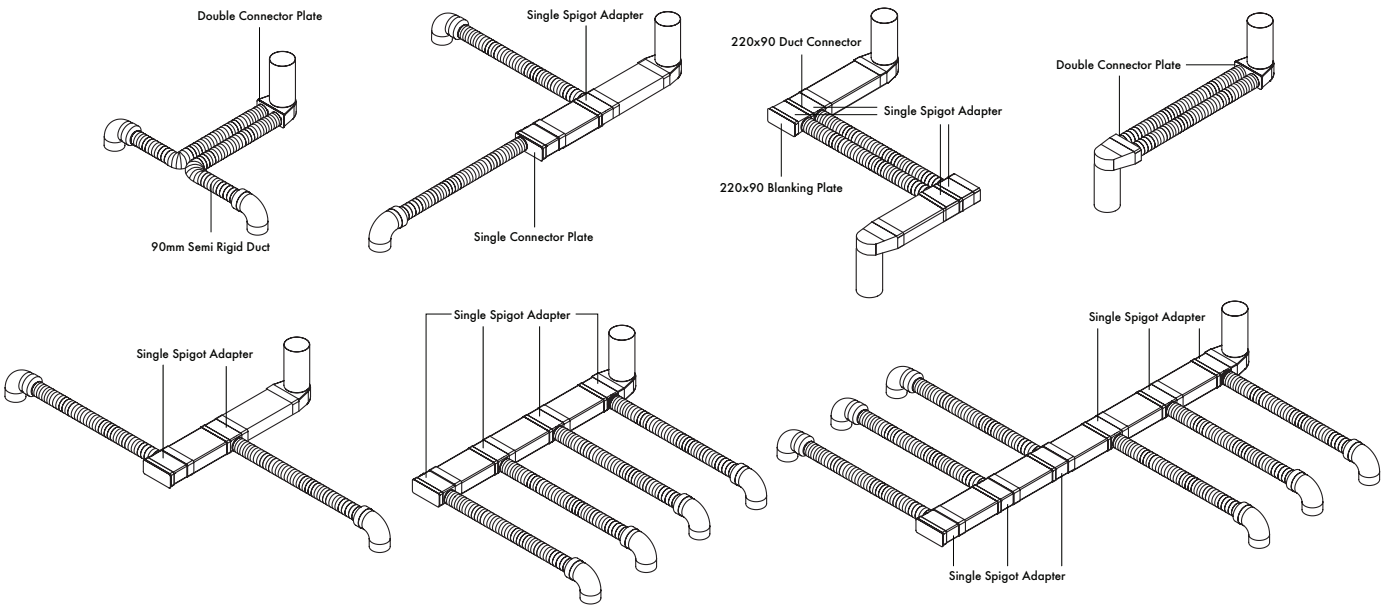

Uniflexplus+ Semi-Rigid Duct System

- Compact, low profile system
- Highly flexible and robust
- Extremely crush resistant
- Quick and easy to install
- PCDB listed
- Suitable for installation in concrete
- Corrosion resistant
- Smooth inner surface with antistatic and antibacterial coating
- Independently tested and accredited for air tightness
- Class D air tightness
- Operating temp.: -20°C to +60°C
- A spigot blanking cap is provided for use with single runs of semi-rigid

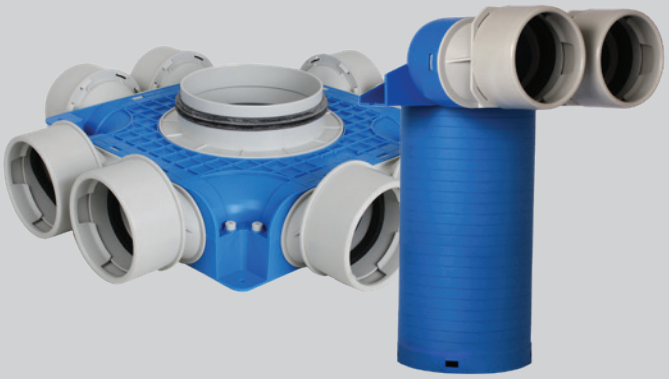

Uniflexplus+ Semi-Rigid Range

The new Uniflexplus+ Semi-Rigid Range sets the standard for easy to install, low profile ducting solutions. The system gives all of the flexibility that semi-rigid ducting provides - without taking up vital space. With minimal components, the system is uncomplicated to ensure a hassle-free, speedy install.

The Uniflexplus+ Semi-Rigid Range is compatible with most wholehouse ventilation systems including the Lo-Carbon Sentinel Kinetic Range (MVHR).

Accessories

Description	Duct Size	Stock Ref
Circular Extract Diffusers	125mmØ	10544125
Duct Knife	Ø90mm	472252
90° Bend	Ø90mm	472253
Coupler	Ø90mm	472254

Description	Model	Duct Size	Stock Ref
Adjustable Round Valve	RV125	125mmØ	479372
Adjustable Round Valve Large	RVG125	125mmØ	479373
Adjustable Square Valve	RVV125	125mmØ	479374
Adjustable Valve Collar	RVK	125mmØ	479376
Adjustable Valve Blanking Plate*	RVB	125mmØ	479377

*Not suitable for RVV125 model

Complete System Setup Examples

The distribution boxes can be mounted vertically on a wall or fixed horizontally onto a ceiling slab to achieve a solution tailored to your need. At a depth of just 90mm, the distribution boxes offer a considerably low-profile solution - they can then be combined with various components to suit on-site needs.

Semi-Rigid ducting is run from distribution boxes and ancillaries to respective rooms in the dwelling. Connecting the Semi-Rigid ducting to components is exceptionally straightforward to allow speedy installation - simply turn the ducting into the spigot until it clicks twice to achieve an airtight mechanical seal.

Rigid or flexible 125mm diameter ducting is then run from the MVHR unit to the distribution box.

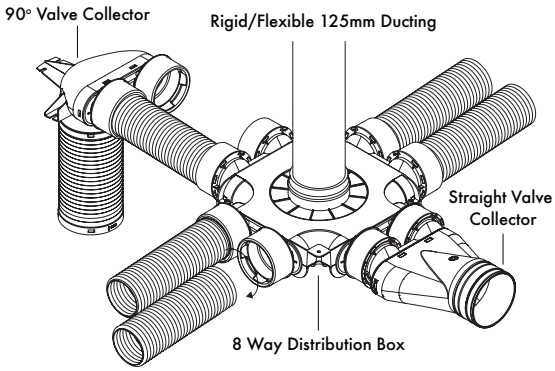

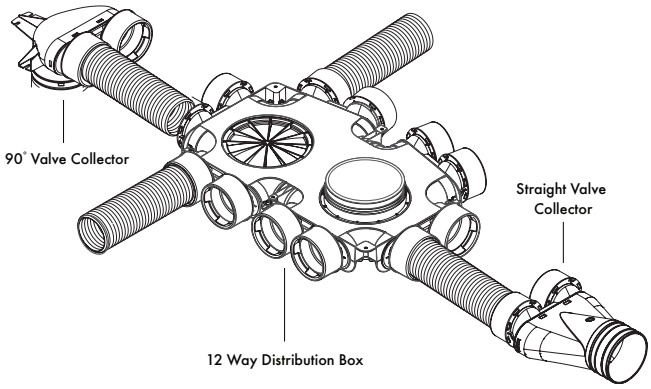

Models

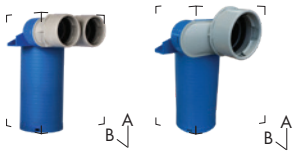

90° Valve Collector

The 90° Valve Collector connects a section of 125mm diameter ducting and turns 90° into 1 or 2 spigots to connect to the semi rigid - ideal for dropping semi-rigid into ceiling diffusers.

Duct Size	Stock Ref
2xØ90 - Ø125mm	472248
1xØ90 - Ø125mm	472249

Dimensions (mm)

Stock Ref	Curve Ref	A	B	kg
472248	1	376	300	0.9
472249				0.8

Performance

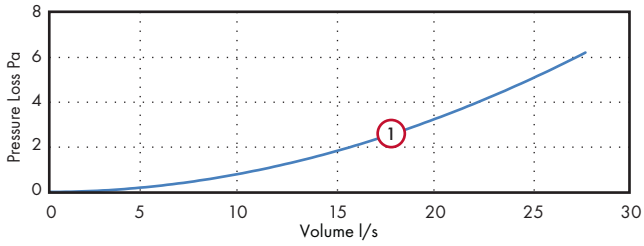

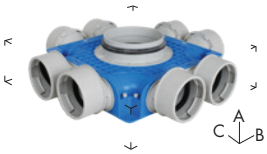

Distribution Box

The low-profile distribution box runs a central spigot of diameter 125mm into a set of either 8 or 12 sub-spigots, depending on requirements. Available with 90mm semi-rigid spigots.

Model	Stock Ref
12xØ90 - Ø125mm	472250
8xØ90 - Ø125mm	472251

Dimensions (mm)

Stock Ref	Curve Ref	A	B	C	kg
472250	1	124	755	520	3.9
472251	2	125	479	479	2.3

Performance

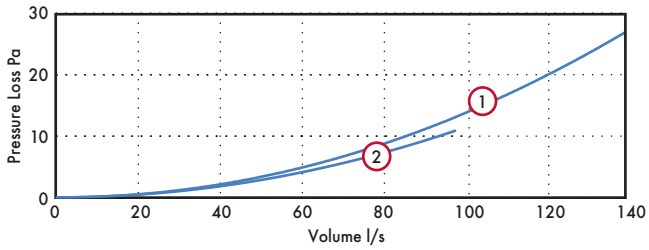

Straight Valve Collector

The straight valve collector takes 125mm ducting and turns it straight into 2 spigots to connect to semi-rigid.

Model	Stock Ref
2xØ90mm - Ø125mm	472262

Dimensions (mm)

Stock Ref	A	B	C
472262	123	311	229

Semi-Rigid Ducting

Suitable for installation in concrete ceilings, suspended ceilings, internal walls, risers or frames, the Semi-Rigid Ducting is double-walled providing optimum flexibility. With an antistatic and antibacterial coating, the internal surface of the Semi-Rigid Ducting is smooth to ensure minimal resistance to airflow. Normally flammable construction material class E, according to EN-13501-1.

Pipe Size	Stock Ref
90mmØ x 50m	406588
90mmØ x 25m	474078

Dimensions (mm)

Stock Ref	Curve Ref	O/I Ømm	Length m	Coil Ømm	Coil Height mm	kg
406588	1	90/78	50	1130	250	19.5
474078	-	90/78	25	1130	125	9.8

Performance

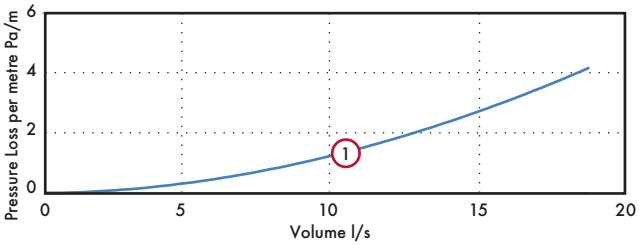

Internal Fit Wall Kit

- Ideal for high-rise applications
- Suitable for 100mm fans
- Quick & easy installation
- Extendable length
- Fits from inside the property
- Reduces water ingress
- Includes low-resistance external grille
- Suitable as a passive air grille
- Covers external break-out

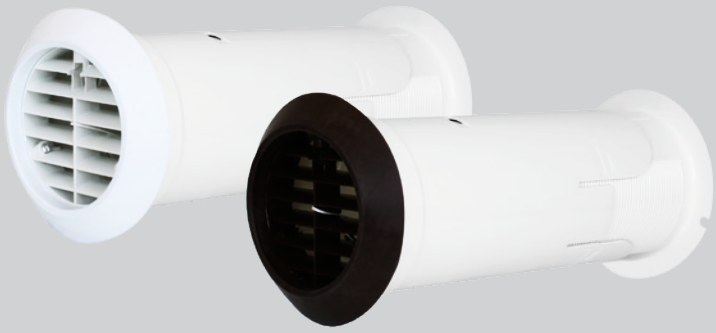

Internal Fit Wall Kit

The Internal Fit Wall Kit is designed to simplify installation and improve the finish of 100mm through the wall installations, also providing an external grille and water ingress protection shroud.

High Rise Buildings

The Wall Kit can be fully installed from inside the building, avoiding the need for scaffolding and significantly reducing the cost and complexity associated with these sites. After core-drilling a 117mm hole, or utilising an appropriate existing hole, the Kit simply pushes through from the inside of the building. Spring pins secure the external grille in position and the external shroud deploys around the grille covering up break-out from the external surface.

Installer Friendly

Quick and easy to install, the Internal Fit Wall Kit cuts down time on site when compared to traditional methods using flexi-duct. Installers no longer need to spend time fixing flexi-duct to fans and grilles using jubilee clips, or going outside to fit the grille. The tubes extend to accommodate wall thicknesses from 225mm up to 390mm and lock into position for a secure fit. The internal flange is also flexible enough to accommodate deviations in the internal surface finish.

Building Regulations

The external grille free area is greater than 90% of the area of the duct making it suitable for continuous running systems as well as for intermittent fans.

Backdraught Shutter

The Internal Fit Wall Kit has optional backdraught shutter models. Particularly useful with intermittent fans, the backdraught shutter will ensure no draughts and gusts come in to the home through the wall kit.

Models

Model	Stock Ref
White External Grille	472318
Brown External Grille	472319
White External Grille with Backdraught Shutter	474779

Dimensions (mm)

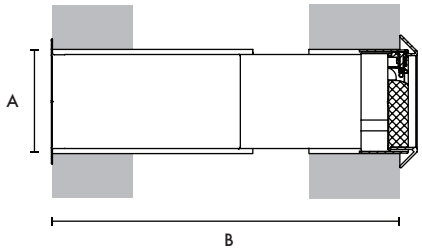

A	B
117mmØ	225-390mm

Features

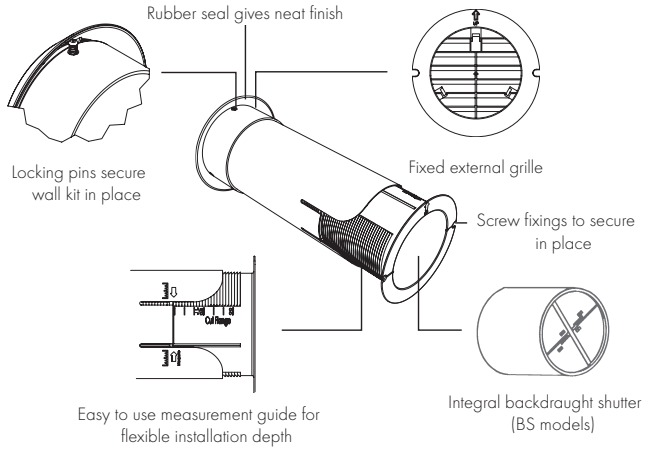

Low Resistance Inlet/Outlet Air Brick

- Provides over 90% free area of duct
- Easier to install than a double air brick
- Guide vanes for improved duct connection
- Optional first fix duct section

Available in five colours, this low resistance air brick has been designed to comply with the latest Building Regulations Approved Document F, which requires a ventilation outlet to achieve a minimum of 90% of the cross sectional area of the ductwork.

Installing a single air brick is much simpler than a double air brick and offers more versatility for locations.

Suitable for installation with round 100mm and 125mm diameter and rectangular 204 x 60mm ducting.

Attaching duct to the air brick is simplified by the use of guide vanes which help locate the duct onto the spigot.

A 500mm section of 204 x 60 duct is available for first fix which ensures that connections are accessible after completion of building works.

Five colour options ensure that the low resistance air brick will be a match for almost any application.

Models

Model	Stock Ref
White	449223
Brown	449224
Cotswold Stone	449225
Grey	449226
Terracotta	449227
1st Fix duct section 500 x 204 x 60	403255

Available Colours

White RAL 9003	Brown RAL 8017	Cotswold Stone RAL 1001	Grey RAL 7037	Terracotta RAL 8004

Performance Guide

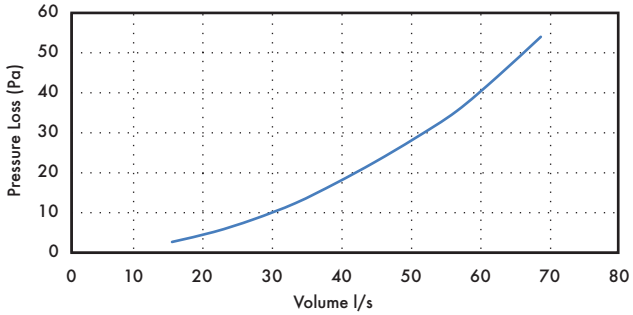

Pressure (Pa)	Volume (m^3/h)	Volume (l/s)
2.7	53.7	14.9
5.2	75.9	21.1
8.3	97.0	26.9
12.4	119.4	33.2
17.4	141.0	39.2
22.7	162.0	45.0
28.7	183.7	51.0
35.4	205.6	57.1
44.1	227.6	63.2
54.0	250.4	69.6

Dimensions (mm)

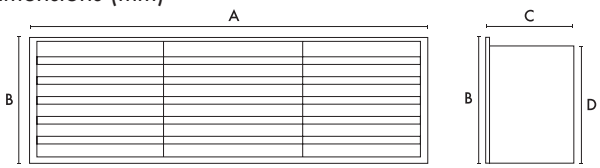

A	B	C	D
212	67	58	65

Ducting & Accessories

Flat Channel Ducting Insulated/Uninsulated

		External Dimensions (mm)			Resistance (Pa) at flow rate							
Stock Ref	Duct Size	A	B	C	8 l/s	13 l/s	21 l/s	29 l/s	37 l/s	45 l/s	53 l/s	61 l/s
433944	Uninsulated 110 x 54 x 2m	54	110	2000	-	-	-	-	-	-	-	-
436599	Uninsulated 110 x 54 x 1.5m	54	110	1500	1.2	2.4	5.3	9.1	13.9	19.8	25.9	32
496156	Uninsulated 204 x 60 x 1m	60	204	1000	<1	<1	<1	1.5	2.2	3.0	3.9	5.1
436617	Uninsulated 204 x 60 x 1.5m	60	204	1500	<1	<1	1.3	2.2	3.3	4.5	5.9	7.8
406870*	Insulated 204 x 60 x 1.5m	210	354	1500	<1	<1	1.3	2.2	3.3	4.5	5.9	7.8
496160*	Insulated Sleeve 204 x 60 x 2m	210	354	2000	-	-	-	-	-	-	-	-
496161*	Insulated 204 x 60 x 2m	210	354	2000	-	-	-	-	-	-	-	-
474677	Uninsulated 204 x 60 x 2m	60	204	2000	<1	<1	1.7	2.9	4.3	5.9	7.7	10.4

Stock Ref	Duct Size	A	B	C	60 l/s	120 l/s	180 l/s
496157	Uninsulated 220 x 90 x 1m	90	220	1000	0.9	3.2	6.7
407343*	Insulated 220 x 90 x 1.5m	240	370	1500	1.4	4.9	10.2
403025	Uninsulated 220 x 90 x 1.5m	90	220	1500	1.4	4.9	10.2
474678	Uninsulated 220 x 90 x 2m	90	220	2000	1.9	2.6	13.6

Flat Channel Connector. F to F

		External Dimensions (mm)			Resistance (Pa) at flow rate							
Stock Ref	Duct Size	A	B	C	8 l/s	13 l/s	21 l/s	29 l/s	37 l/s	45 l/s	53 l/s	61 l/s
436623**	204 x 60	64	212	100	<1	<1	<1	<1	<1	<1	1.2	1.5
436605	110 x 54	54	114	100	<1	<1	1.1	1.4	2.2	3.4	4.8	6.4

Stock Ref	Duct Size	A	B	C	60 l/s	120 l/s	180 l/s
403026	220 x 90	95	224	52	<1	<1	<1

Channel Fixing Clip (Pack of 10)

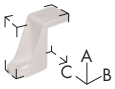

		External Dimensions (mm)			Resistance (Pa) at flow rate		
Stock Ref	Duct Size	A	B	C	60 l/s	120 l/s	180 l/s
403030	220 x 90	97	44	19	N/A	N/A	N/A

Horizontal 90° Bend. F to F

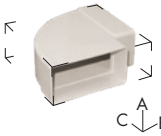

		External Dimensions (mm)			Resistance (Pa) at flow rate							
Stock Ref	Duct Size	A	B	C	8 l/s	13 l/s	21 l/s	29 l/s	37 l/s	45 l/s	53 l/s	61 l/s
406879*	Insulated 204 x 60	210	385	385	0.7	1.7	4.1	8.4	13	18	25	34
436620**	Uninsulated 204 x 60	65	260	260	0.7	1.7	4.1	8.4	13	18	25	34
436602	Uninsulated 110 x 54	60	152	152	2.3	9.9	21	38	64	93	124	162

Stock Ref	Duct Size	A	B	C	60 l/s	120 l/s	180 l/s
407342*	Insulated 220 x 90	240	375	375	9	36	80
403028	Uninsulated 220 x 90	95	250	250	9	36	80

Horizontal 45° Bend. F to F

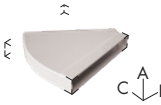

		External Dimensions (mm)			Resistance (Pa) at flow rate							
Stock Ref	Duct Size	A	B	C	8 l/s	13 l/s	21 l/s	29 l/s	37 l/s	45 l/s	53 l/s	61 l/s
437280	Uninsulated 110 x 54	-	-	-	-	-	-	-	-	-	-	-
406876*	Insulated 204 x 60	210	390	385	0.2	0.7	1.2	2.1	3.8	6.1	9.2	13
249944**	Uninsulated 204 x 60	65	240	260	0.2	0.7	1.2	2.1	3.8	6.1	9.2	13

Stock Ref	Duct Size	A	B	C	60 l/s	120 l/s	180 l/s
449363	Uninsulated 220 x 90	95	240	200	5	20	46

*Minimum insulation wall thickness 25mm. Insulation Thermal Conductivity: 0.04 W/(m.K)
**This part comes in Grey. Whilst we will look to maintain the colour of Grey, by the nature of adopting a recycled plastic the colour and shade may vary at any given time.

Horizontal T. F to F to F

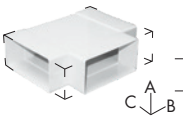

		External Dimensions (mm)			Resistance (Pa) at flow rate							
Stock Ref	Duct Size	A	B	C	8 l/s	13 l/s	21 l/s	29 l/s	37 l/s	45 l/s	53 l/s	61 l/s
406883*	Insulated 204 x 60	210	410	380	vary on installation							
436551**	Uninsulated 204 x 60	65	310	255	vary on installation							
436614	Uninsulated 110 x 54	60	185	150	vary on installation							
Stock Ref	Duct Size	A	B	C	60 l/s		120 l/s				180 l/s	
449365	Uninsulated 220 x 90	95	275	250	vary on installation							

Vertical 90° Bend. F to F

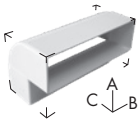

		External Dimensions (mm)			Resistance (Pa) at flow rate							
Stock Ref	Duct Size	A	B	C	8 l/s	13 l/s	21 l/s	29 l/s	37 l/s	45 l/s	53 l/s	61 l/s
406872*	Insulated 204 x 60	240	360	240	1.1	2.5	5.2	9.8	16.1	24	33.6	45
436621**	Uninsulated 204 x 60	115	210	115	1.1	2.5	5.2	9.8	16.1	24	33.6	45
436603	Uninsulated 110 x 54	95	115	95	3.3	15.5	36	61	96	138	190	253
Stock Ref	Duct Size	A	B	C	60 l/s		120 l/s				180 l/s	
403029	Uninsulated 220 x 90	117	224	120	7		28				66	

Vertical 45° Bend. F to F

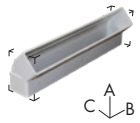

		External Dimensions (mm)			Resistance (Pa) at flow rate							
Stock Ref	Duct Size	A	B	C	8 l/s	13 l/s	21 l/s	29 l/s	37 l/s	45 l/s	53 l/s	61 l/s
406871*	Insulated 204 x 60	225	360	230	0.1	0.5	1.3	2.5	4.4	6.9	10	13.3
445196**	Uninsulated 204 x 60	100	210	115	0.1	0.5	1.3	2.5	4.4	6.9	10	13.3
441655	Uninsulated 110 x 54	115	115	70	1	2.4	6.6	12.9	23.1	35.1	48	64
Stock Ref	Duct Size	A	B	C	60 l/s		120 l/s				180 l/s	
449364	Uninsulated 220 x 90	110	225	115	6		27				65	

Elbow Bend. 100mm to Rectangular. M to F

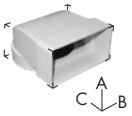

		External Dimensions (mm)			Resistance (Pa) at flow rate							
Stock Ref	Duct Size	A	B	C	8 l/s	13 l/s	21 l/s	29 l/s	37 l/s	45 l/s	53 l/s	61 l/s
436624**	204 x 60	80	215	195	2.9	7.1	15.1	28	45.1	68.1	92.2	118
436607	110 x 54	90	115	140	3	8	17.7	33	49.9	74.5	101	137
Stock Ref	Duct Size	A	B	C	60 l/s		120 l/s				180 l/s	
403027	220 x 90	118	226	240	N/A		N/A				N/A	

Elbow Bend. 125mm to Rectangular. M to F

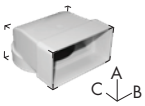

		External Dimensions (mm)			Resistance (Pa) at flow rate							
Stock Ref	Duct Size	A	B	C	8 l/s	13 l/s	21 l/s	29 l/s	37 l/s	45 l/s	53 l/s	61 l/s
436625**	204 x 60	80	215	195	3.1	5.9	12.2	25	43.6	62.2	86	111
Stock Ref	Duct Size	A	B	C	60 l/s		120 l/s				180 l/s	
449361	220 x 90	118	226	240	N/A		N/A				N/A	

*Minimum insulation wall thickness 25mm. Insulation Thermal Conductivity: 0.04 W/(m.K)
**This part comes in Grey. Whilst we will look to maintain the colour of Grey, by the nature of adopting a recycled plastic the colour and shade may vary at any given time.

Ducting & Accessories

Elbow Bend. 150mm to Rectangular. M to F

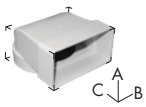

		External Dimensions (mm)			Resistance (Pa) at flow rate							
Stock Ref	Duct Size	A	B	C	8 l/s	13 l/s	21 l/s	29 l/s	37 l/s	45 l/s	53 l/s	61 l/s
436626**	204 x 60	80	215	195	2.8	4.9	11.6	21	31	41	53	67

Stock Ref	Duct Size	A	B	C	60 l/s	120 l/s	180 l/s
449362	220 x 90	118	226	240	N/A	N/A	N/A

Elbow Bend. 100mm to Rectangular. F to F

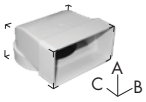

		External Dimensions (mm)			Resistance (Pa) at flow rate							
Stock Ref	Duct Size	A	B	C	8 l/s	13 l/s	21 l/s	29 l/s	37 l/s	45 l/s	53 l/s	61 l/s
436608**	110 x 54	90	115	140	2.1	5.5	14.3	27.2	44.3	69	93	118

Flat Channel connector with Damper

		External Dimensions (mm)			Resistance (Pa) at flow rate							
Stock Ref	Duct Size	A	B	C	8 l/s	13 l/s	21 l/s	29 l/s	37 l/s	45 l/s	53 l/s	61 l/s
400735	110 x 54	60	115	75	16	17.5	19.5	22	25.5	30.5	36	42

Drop down section F to F

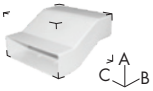

		External Dimensions (mm)			Resistance (Pa) at flow rate							
Stock Ref	Duct Size	A	B	C	8 l/s	13 l/s	21 l/s	29 l/s	37 l/s	45 l/s	53 l/s	61 l/s
442273	204 x 60	120	220	210	0.2	0.5	1.7	3.6	6.0	9.1	12.4	16.6

Single Air Brick Horizontal (System 60 Air Grille Adaptor is supplied with the Single Air Bricks)

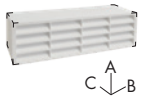

		External Dimensions (mm)			Resistance (Pa) at flow rate							
Stock Ref	Duct Size	A	B	C	8 l/s	13 l/s	21 l/s	29 l/s	37 l/s	45 l/s	53 l/s	61 l/s
436612	110 x 54 (Terracotta)	65	210	85	3.2	7.8	20.9	39	65	96	128	176
436611	110 x 54 (Brown)	65	210	85	3.2	7.8	20.9	39	65	96	128	176

Single Air Grille Soldier

		External Dimensions (mm)			Resistance (Pa) at flow rate							
Stock Ref	Duct Size	A	B	C	8 l/s	13 l/s	21 l/s	29 l/s	37 l/s	45 l/s	53 l/s	61 l/s
438594	204 x 60 (White)	210	65	15	3.3	10	20.6	40	63	92.8	128	168
468728	204 x 60 (Terracotta)	210	65	15	3.3	10	20.6	40	63	92.8	128	168
468730	204 x 60 (Brown)	210	65	15	3.3	10	20.6	40	63	92.8	128	168
468729	204 x 60 (Beige)	210	65	15	3.3	10	20.6	40	63	92.8	128	168

**This part comes in Grey. Whilst we will look to maintain the colour of Grey, by the nature of adopting a recycled plastic the colour and shade may vary at any given time.

Double Air Brick

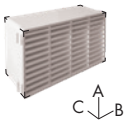

Stock Ref	Duct Size*	Colour	External Dimensions (mm) A	B	C	Resistance (Pa) at flow rate 8 l/s	13 l/s	21 l/s	29 l/s	37 l/s	45 l/s	53 l/s	61 l/s
438604	204 x 60 or 220 x 90	White	145	245	80	0.2	1.6	4.3	8.7	13.9	21.1	27.5	37.4
438607		Terracotta	145	245	80	0.2	1.6	4.3	8.7	13.9	21.1	27.5	37.4
438605		Brown	145	245	80	0.2	1.6	4.3	8.7	13.9	21.1	27.5	37.4
438606		Beige	145	245	80	0.2	1.6	4.3	8.7	13.9	21.1	27.5	37.4

*In conjunction with Double Air Brick Adaptor below

Double Air Brick Adaptor Rectangular Duct

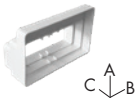

Stock Ref	Duct Size	External Dimensions (mm) A	B	C	Resistance (Pa) at flow rate 8 l/s	13 l/s	21 l/s	29 l/s	37 l/s	45 l/s	53 l/s	61 l/s
438608	204 x 60	135	226	85	-	-	-	-	-	-	-	-
449367	220 x 90	135	226	85	-	-	-	-	-	-	-	-

Double Air Brick Adaptor Round Duct

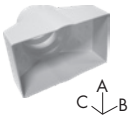

Stock Ref	Duct Size	External Dimensions (mm) A	B	C	Resistance (Pa) at flow rate 8 l/s	13 l/s	21 l/s	29 l/s	37 l/s	45 l/s	53 l/s	61 l/s
449360	220 x 90 to 100/125/150	-	-	-	-	-	-	-	-	-	-	-

Air Grille Adaptor

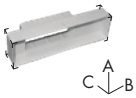

Stock Ref	Duct Size	External Dimensions (mm) A	B	C	Resistance (Pa) at flow rate 8 l/s	13 l/s	21 l/s	29 l/s	37 l/s	45 l/s	53 l/s	61 l/s
436609	110 x 54	65	210	85	0.2	1.2	2.5	4.7	7.8	11	14	18

Flexible Ducting

Stock Ref	Duct Size	External Dimensions (mm) A	B	C	Resistance (Pa) at flow rate 8 l/s	13 l/s	21 l/s	29 l/s	37 l/s	45 l/s	53 l/s	61 l/s
5109662	204 x 60	-	-	-	0.2	0.6	1.5	2.6	4.1	6.0	8.2	11.5

Stock Ref	Duct Size	A	B	C	60 l/s	120 l/s	180 l/s
449366	220 x 90	-	-	-	N/A	N/A	N/A

Louvred Grille with Flyscreen Fitting

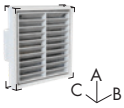

Stock Ref	Duct Size	External Dimensions (mm) A	B	C	Resistance (Pa) at flow rate 8 l/s	13 l/s	21 l/s	29 l/s	37 l/s	45 l/s	53 l/s	61 l/s
400743	110 x 54	140	140	50	5.7	14.5	37	75	120	-	-	-

Round (M) 100mm to Rectangular (F/M) Adaptor

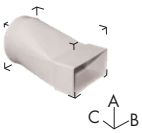

Stock Ref	Duct Size	External Dimensions (mm) A	B	C	Resistance (Pa) at flow rate 8 l/s	13 l/s	21 l/s	29 l/s	37 l/s	45 l/s	53 l/s	61 l/s
441654 **	M to F 204 x 60	140	210	215	1.0	1.96	3.2	4.9	6.7	8.7	11.2	14.5
400740	M to M 110 x 54	100	115	180	1.2	4.2	8.3	19.8	29.9	42	60	86

**This part comes in Grey. Whilst we will look to maintain the colour of Grey, by the nature of adopting a recycled plastic the colour and shade may vary at any given time.

Ducting & Accessories

Round (F) 125mm to Rectangular (F) Adaptor

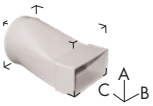

		External Dimensions (mm)			Resistance (Pa) at flow rate							
Stock Ref	Duct Size	A	B	C	8 l/s	13 l/s	21 l/s	29 l/s	37 l/s	45 l/s	53 l/s	61 l/s
370127**	204 x 60	140	210	213	<1	<1	1.5	2.8	4.5	6.7	9	11.5

Round (F) 150mm to Rectangular (F) Adaptor

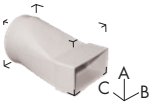

		External Dimensions (mm)			Resistance (Pa) at flow rate		
Stock Ref	Duct Size	A	B	C	60 l/s	120 l/s	180 l/s
403031	220 x 90	160	225	203	N/A	N/A	N/A

Short Round (M) 100mm to 110 x 54 (F) Adaptor

		External Dimensions (mm)			Resistance (Pa) at flow rate							
Stock Ref	Duct Size	A	B	C	8 l/s	13 l/s	21 l/s	29 l/s	37 l/s	45 l/s	53 l/s	61 l/s
455035	110 x 54	60	110	105	1.2	4.3	8.4	20	30.2	43	62	88

Round Ducting Insulated/Uninsulated

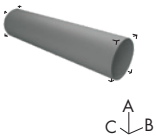

		External Dimensions (mm)			Resistance (Pa) at flow rate							
Stock Ref	Duct Size	A	B	C	8 l/s	13 l/s	21 l/s	29 l/s	37 l/s	45 l/s	53 l/s	61 l/s
497488	Uninsulated 100 Ø x 1m	100	100	1000	<0.5	<0.5	0.85	1.4	1.8	2.25	2.65	3.1
406873	Insulated 100 Ø* x 2m	250	250	2000	<1	<1	1.7	2.8	3.6	4.5	5.3	6.2
5108250	Uninsulated 100 Ø x 2m	100	100	2000	<1	<1	1.7	2.8	3.6	4.5	5.3	6.2
496155	Uninsulated 120 Ø x 1m	120	120	1000	<0.5	<0.5	<0.5	0.65	0.9	1.2	1.55	1.9
434715	Uninsulated 125 Ø* x 1.5m	125	125	1500	<1	<1	<1	1.3	1.8	2.4	3.1	3.8
406874	Insulated 125 Ø* x 2m	275	275	2000	<1	<1	<1	1.3	1.8	2.4	3.1	3.8
496158	Uninsulated 150 Ø x 1m	150	150	1000	<0.5	<0.5	<0.5	<0.5	0.6	0.8	1	1.25
496159	Uninsulated 150 Ø x 1.5m	150	150	1500	-	-	-	-	-	-	-	-
406875	Insulated 150 Ø* x 2m	315	315	2000	<1	<1	<1	<1	1.2	1.6	2	2.5
5108248	Uninsulated 150 Ø x 2m	150	150	2000	<1	<1	<1	<	1.2	1.6	2	2.5

Equal Tee Insulated/Uninsulated MMM

		External Dimensions (mm)			Resistance (Pa) at flow rate							
Stock Ref	Duct Size	A	B	C	8 l/s	13 l/s	21 l/s	29 l/s	37 l/s	45 l/s	53 l/s	61 l/s
406884	Insulated 100 Ø*	290	260	260	vary on installation							
372007	Uninsulated 100 Ø	190	110	135	vary on installation							
406885	Insulated 125 Ø*	310	265	285	vary on installation							
428636	Uninsulated 125 Ø	210	115	160	vary on installation							
406886	Insulated 150 Ø*	335	295	310	vary on installation							
370237	Uninsulated 150 Ø	235	130	177	vary on installation							

*Minimum insulation wall thickness 25mm. Insulation Thermal Conductivity: 0.04 W/(m.K)
**This part comes in Grey. Whilst we will look to maintain the colour of Grey, by the nature of adopting a recycled plastic the colour and shade may vary at any given time.

90° Bend Insulated/Uninsulated MM

		External Dimensions (mm)			Resistance (Pa) at flow rate							
Stock Ref	Duct Size	A	B	C	8 l/s	13 l/s	21 l/s	29 l/s	37 l/s	45 l/s	53 l/s	61 l/s
406880	Insulated 100 Ø*	255	250	225	2.8	5.5	11	20.3	33	45	60	79
372004	Uninsulated 100 Ø	130	100	100	2.8	5.5	11	20.3	33	45	60	79
406881	Insulated 125 Ø*	285	280	255	<1	1.8	5	8.2	11.8	18	26	35
427360	Uninsulated 125 Ø	160	130	130	<1	1.8	5	8.2	11.8	18	26	35
406882	Insulated 150 Ø*	315	305	280	<1	1.0	2.5	4.1	6.4	9.6	13.5	18
370295	Uninsulated 150 Ø	190	155	155	<1	1.0	2.5	4.1	6.4	9.6	13.5	18

45° Bend Insulated/Uninsulated MM

		External Dimensions (mm)			Resistance (Pa) at flow rate							
Stock Ref	Duct Size	A	B	C	8 l/s	13 l/s	21 l/s	29 l/s	37 l/s	45 l/s	53 l/s	61 l/s
406877	Insulated 100 Ø*	305	250	255	<1	1.9	8.1	11.7	17.5	24.6	31.4	-
372005	Uninsulated 100 Ø	180	100	130	<1	1.9	8.1	11.7	17.5	24.6	31.4	-
406878	Insulated 125 Ø*	325	280	275	<1	<1	1.8	2.9	4.6	6.6	9	12.2
441657	Uninsulated 125 Ø	200	130	150	<1	<1	1.8	2.9	4.6	6.6	9	12.2

Connector MM

		External Dimensions (mm)			Resistance (Pa) at flow rate							
Stock Ref	Duct Size	A	B	C	8 l/s	13 l/s	21 l/s	29 l/s	37 l/s	45 l/s	53 l/s	61 l/s
372006	100 Ø	100	60	-	-	-	-	-	-	-	-	-
428633	125 Ø	125	60	-	-	-	-	-	-	-	-	-
370299	150 Ø	150	60	-	-	-	-	-	-	-	-	-

Reducer

		External Dimensions (mm)			Resistance (Pa) at flow rate							
Stock Ref	Duct Size	A	B	C	8 l/s	13 l/s	21 l/s	29 l/s	37 l/s	45 l/s	53 l/s	61 l/s
VA54119	125 to 100	130	57	-	-	-	-	-	-	-	-	-
428632	150 to 125	155	57	-	-	-	-	-	-	-	-	-

Equal Y Piece

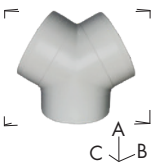

		External Dimensions (mm)			Resistance (Pa) at flow rate							
Stock Ref	Duct Size	A	B	C	8 l/s	13 l/s	21 l/s	29 l/s	37 l/s	45 l/s	53 l/s	61 l/s
497426	100mm/4"	150	175	100	-	-	-	-	-	-	-	-
497428	125mm/5"	173	199	125	-	-	-	-	-	-	-	-
497430	150mm/6"	195	225	150	-	-	-	-	-	-	-	-

*Minimum insulation wall thickness 25mm. Insulation Thermal Conductivity: 0.04 W/(m.K)
**This part comes in Grey. Whilst we will look to maintain the colour of Grey, by the nature of adopting a recycled plastic the colour and shade may vary at any given time.

Circular Extract Diffuser

Manufactured from powder coated steel. Suitable for exhausting air and can be fitted directly to the duct or in the ceiling.

Duct Size	Stock Ref
125 ∅	10544125

Circular Supply Diffuser

Manufactured from powder coated steel. Suitable for supplying air and can be fitted directly to the duct or in the ceiling.

Duct Size	Stock Ref
100 ∅	10543100

Acoustic Mat

486mm x 486mm x 25mm thick foam mat for use as a resilient mounting for wholehouse units.

Model	Stock Ref
ACM/House	370179

Circular Push-Fit Supply Diffuser

Manufactured from ABS. Easy to install by direct push-fit into duct. Suitable for supplying air and can be fitted directly to the duct or in the ceiling.

Duct Size	Stock Ref
100 ∅	476936
125 ∅	476937
150 ∅	476938
200 ∅	476939

Circular Push-Fit Extract Diffuser

Manufactured from ABS. Easy to install by direct push-fit into duct. Suitable for supplying air and can be fitted directly to the duct or in the ceiling.

Duct Size	Stock Ref
100 ∅	476944
125 ∅	476945
150 ∅	476946
200 ∅	476947

Vent-Axia®

VENT-AXIA CONTACT NUMBERS

Free technical, installation and sales advice is available

Sales Centre:

Domestic & Commercial

Sales Tel:	0344 856 0590
Sales Fax:	01293 565169
Tech Support Tel:	0344 856 0594
Tech Support Fax:	01293 532814

Industrial

Sales Tel:	0344 856 0591
Sales Fax:	01293 534898
Tech Support Tel:	0344 856 0595
Tech Support Fax:	01293 532814

Web:	www.vent-axia.com
Email:	sales@vent-axia.com

Supply & Service

All sales made by Vent-Axia Limited are made only upon the terms of the Company's Conditions of Sale, a copy of which may be obtained on request. As part of the policy of continuous product improvement Vent-Axia reserves the right to alter specifications without notice.

Made in Britain