Vent-Axia®

UTILITY & KITCHEN FAN

Installation and Wiring Instructions

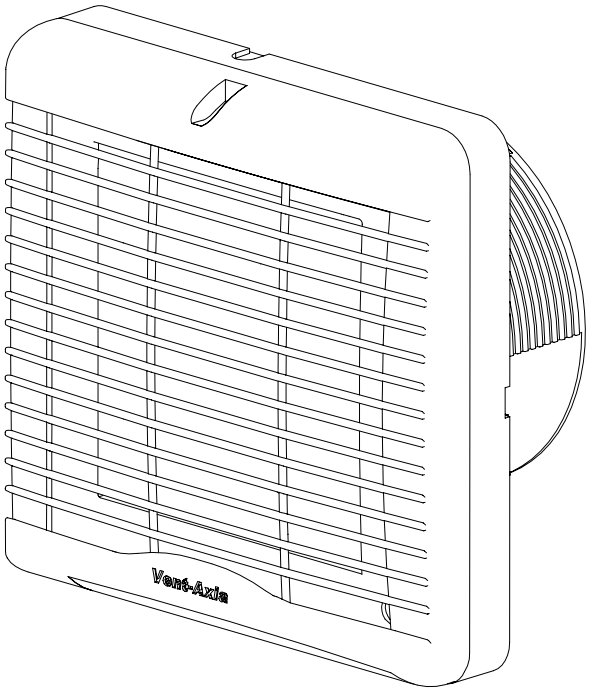

Stock Ref. N°

45 91 23 (Pullcord)
45 91 24 (Timer)
45 91 25 (Humidistat)

LoWatt

READ INSTRUCTIONS IN CONJUNCTION WITH ILLUSTRATIONS
PLEASE SAVE THESE INSTRUCTIONS

CE

Vent-Axia

Installation and Wiring Instructions for the LoWatt Utility and Kitchen Extract Fan.

IMPORTANT:
READ THESE INSTRUCTIONS BEFORE COMMENCING THE INSTALLATION

DO NOT install this product in areas where the following may be present or occur:
- Excessive oil or a grease laden atmosphere.
- Corrosive or flammable gases, liquids or vapours.
- Ambient temperatures higher than 40°C or less than –5°C.
- Possible obstructions which would hinder the access or removal of the Fan.
- Sudden ductwork bends or transformations close to the Fan.

SAFETY AND GUIDANCE NOTES

A. All wiring to be in accordance with the current I.E.E. Regulations, or the appropriate standards of your country and **MUST** be installed by a suitably qualified person.
B. The Fan should be provided with a local double pole isolator switch having a contact separation of at least 3mm.
C. Ensure that the mains supply (Voltage, Frequency, and Phase) complies with the rating label.
D. The Fan should only be used in conjunction with the appropriate Vent-Axia products.
E. It is recommended that the connection to the fan connecter terminals is made with flexible cable.
F. When the Fan is used to remove air from a room containing a fuel-burning appliance, ensure that the air replacement is adequate for both the fan and the fuel-burning appliance.
G. The Fan should not be used where it is liable to be subject to direct water spray for prolonged periods of time.
H. Where ducted Fans are used to handle moisture-laden air, a condensation trap should be fitted. Horizontal ducts should be arranged to slope slightly downwards away from the Fan.
I. This appliance is not intended for use by young children or infirm persons without supervision.
J. Young children should be supervised to ensure that they do not play with the appliance.

DESCRIPTION

The LoWatt Utility/Kitchen Fan is suitable for Panel mounting either in a horizontal or vertical plane as standard; both Window (14 09 01) and Wall (14 09 02 White / 14 09 03 Brown) Kits are available to suit these options.

[A] Indoor Grille.
[B] Inner Cover.
[C] Cable Grommet.
[D] Base Housing.
[E] Telescopic Wall Liner.
[F] Outside Grille.
[G] Spacers.

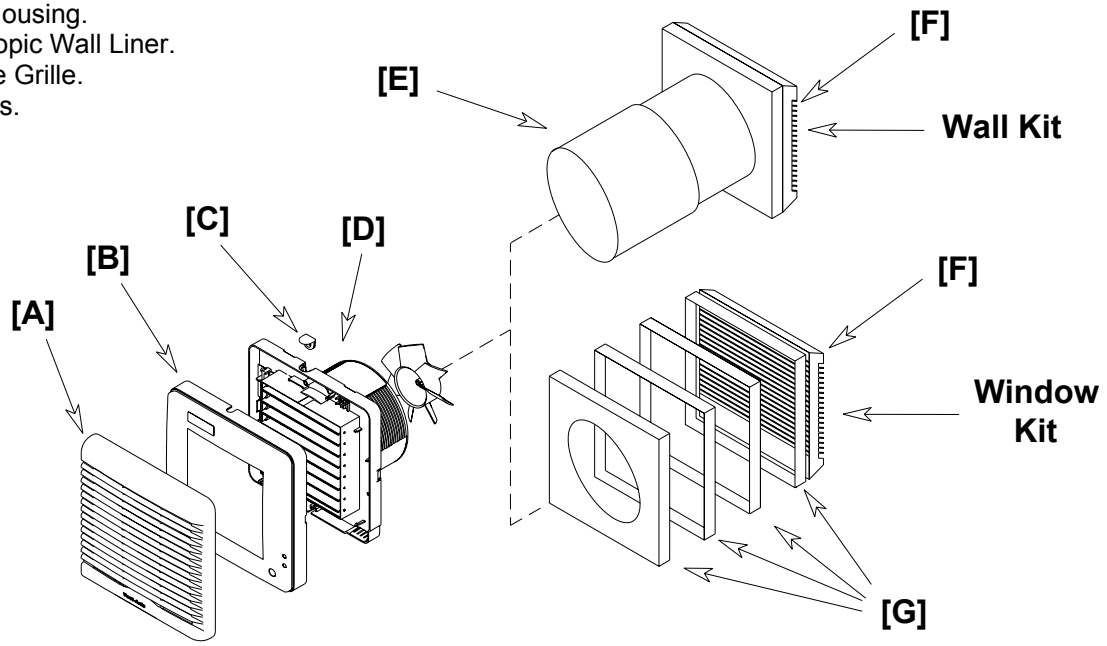

A INSTALLATION.

PANEL MOUNTING

1. Cut a 152mm∅ hole through the panel, also suitable for existing holes up to 185mm∅.
2. Remove the Indoor Grille [A]. Loosen the screw (top middle) of the Grille, to release front grille gently lever the Grille downwards away from the Inner Cover [B].
3. Remove Inner Cover [B]. Insert a small bladed screwdriver into the slot on the sides of the Cover, push the release catch in and gently lever the cover away from the Base Housing [D].
4. Remove the Cable Grommet [C], pierce/cut a hole in the Grommet to suit the cable size, maintaining the integrity of the seal and replace the grommet in the Base Housing to suit either a top or back cable entry.
5. Slide the Base Housing into the hole in the panel and secure into position using screws and fixings provided.

Fig. 1.

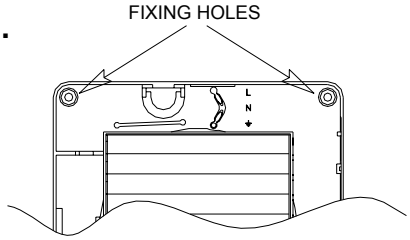

6. Ensure the fan blade rotates freely.
7. Select and follow the appropriate wiring diagram in **Section B WIRING.**
8. Replace the Inner Cover and Indoor Grille (retightening the screw securely).
9. Switch the mains power supply on and check the fan is operating correctly.

WALL MOUNTING

1. Cut a 152mm∅ (suitable for up to 185mm∅) hole through the wall and insert the wall sleeve with the larger diameter sleeve on the room side and cement both ends into position flush with the wall faces. The wall sleeve should be angled downwards away from the fan to allow any condensation to drain to the outside wall.
2. Remove the Wall Mount from the Outside Grille [F] to use as a template, mark the fixing hole centres on the wall. Drill and plug the wall and fix the Wall Mounting Plate into position (screws provided).
3. Fix the Outside Grille [F] back onto the Wall Mounting Plate. Ensure the louvres are pointing downwards.
4. Remove the Indoor Grille [A]. Loosen the screw (top middle) of the Grille, to release front grille gently lever the Grille downwards away from the Inner Cover [B].
5. Remove Inner Cover [B]. Insert a small bladed screwdriver into the slot on the sides of the Cover, push the release catch in and gently lever the cover away from the Base Housing [D].
6. Remove the Cable Grommet [C], pierce/cut a hole in the Grommet to suit the cable size, maintaining the integrity of the seal and replace the grommet in the Base Housing to suit either a top or back cable entry.
7. Slide the Base Housing into the Wall Liner and secure into position using screws and fixings provided (*Fig. 1.)*.
8. Ensure the fan blade rotates freely.
9. Select and follow the appropriate wiring diagram in **Section B WIRING.**
10. Replace the Inner Cover and Indoor Grille (retightening the screw securely).
11. Switch the mains power supply on and check the fan is operating correctly.

WINDOW MOUNTING

1. Cut a 152mm∅ hole in the glass, also suitable for existing holes up to 185mm∅.
2. Ensure that the glass surfaces are clean and free from grease.
3. Remove the Indoor Grille [A]. Loosen the screw (top middle) of the Grille, to release front grille gently lever the Grille downwards away from the Inner Cover [B].
4. Remove Inner Cover [B]. Insert a small bladed screwdriver into the slot on the sides of the Cover, push the release catch in and gently lever the cover away from the Base Housing [D].
5. Remove the Cable Grommet [C], pierce/cut a hole in the Grommet to suit the cable size, maintaining the integrity of the seal and replace the grommet in the Base Housing to suit a top cable entry.
6. Fit required spacers behind the fan back plate, engaging the locating pips. Place the fan spigot through the hole in the glass from the inside, with a gasket on each side of the glass.
7. From the outside, place on the remaining spacer, with the locating pips facing outwards. For double-glazing and materials up to 40mm thick, one or more spacers may be discarded.
8. Draw the assembly together with the threaded fixing ring. Do not over-tighten.
9. Fix the Outside Grille [F] on to the Spacers (screws provided). Ensure the louvres are pointing downwards.
10. Ensure the fan blade rotates freely.
11. Select and follow the appropriate wiring diagram in **Section B WIRING.**
12. Replace the Inner Cover and Indoor Grille (retightening the screw securely).
13. Switch the mains power supply on and check the fan is operating correctly

B. WIRING.

WARNING: THE FAN AND ANY ANCILLARY CONTROL EQUIPMENT MUST BE ISOLATED FROM THE POWER SUPPLY DURING THE INSTALLATION / OR MAINTENANCE.

1. Select and follow the appropriate wiring diagram (Fig. 2-4).
2. Check all connections have been made correctly and ensure all terminal connections and cable clamps are securely fastened.
3. The cable entry must be made using the cable grommet.
4. Ensure the impeller rotates and is free from obstructions.

Fig. 2.
LoWatt U/KP
(45 91 23) Pullcord Model.

Select the wiring configuration required for the Utility or Kitchen.

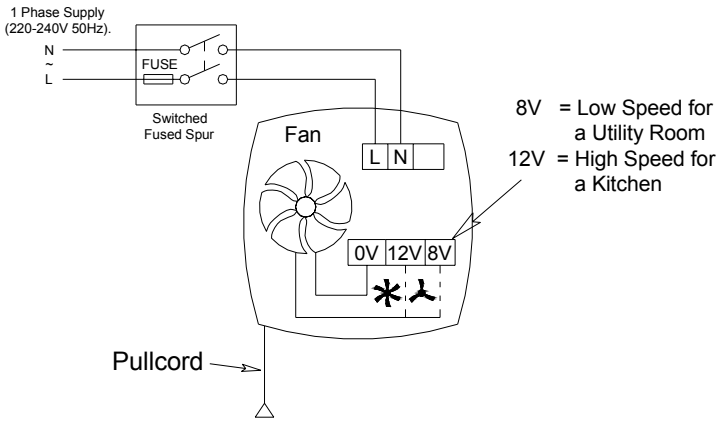

Fig. 3.
LoWatt U/KT
(45 91 24) Timer Model.

Select the wiring configuration required for the Utility or Kitchen.

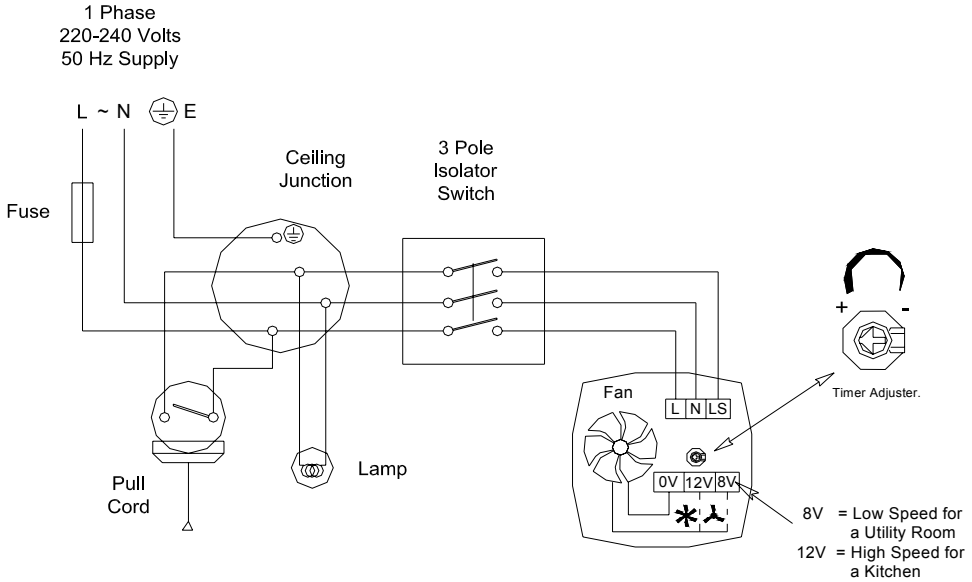

Timer Adjustment.

The overrun time period is factory set to 15 minutes. The overrun time period may be adjusted from 5-30 minutes, by altering the adjuster on the Fan PCB.

Before adjusting the timer, switch off the Mains Supply.

1. Remove the Indoor Grille [A]. Loosen the screw (top middle) of the Grille, to release front grille gently lever the Grille downwards away from the Inner Cover [B].
2. Remove Inner Cover [B]. Insert a small bladed screwdriver into the slot on the sides of the Cover, push the release catch in and gently lever the cover away from the Base Housing [D].
3. To REDUCE the operating time, turn the Timer Adjuster CLOCKWISE.
4. To INCREASE the operating time, turn the Timer Adjuster ANTI-CLOCKWISE.
5. Replace the Inner Cover and Indoor Grille.
6. Reconnect the mains supply.

Fig. 4.
LoWatt U/KH
(45 91 25) Humidity Controlled Model.

Select the wiring configuration required for the Utility or Kitchen.

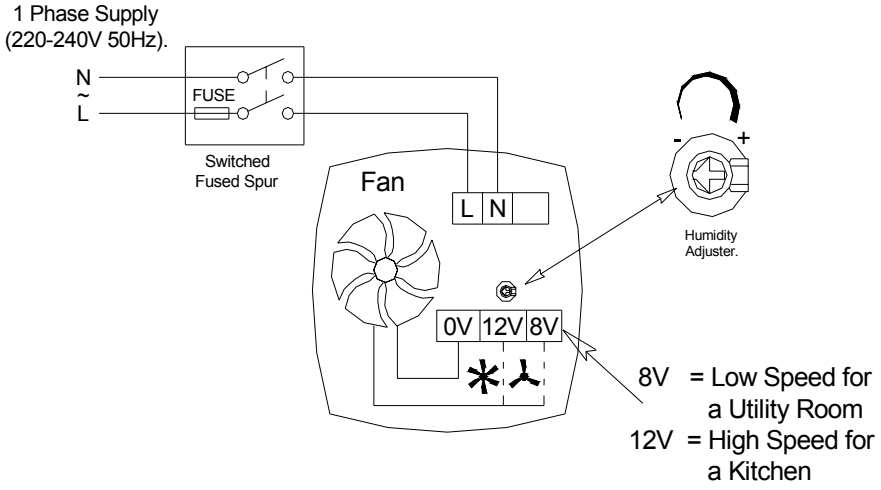

Humidity Set-Point Adjustment.

The Fan's Humidity Set-Point is factory set to switch the fan on at 72%RH.

Before adjusting the Set-Point, switch off the Mains Supply.

1. Remove the Indoor Grille [A]. Loosen the screw (top middle) of the Grille, to release front grille gently lever the Grille downwards away from the Inner Cover [B].
2. Remove Inner Cover [B]. Insert a small bladed screwdriver into the slot on the sides of the Cover, push the release catch in and gently lever the cover away from the Base Housing [D].
3. To LOWER the Set-Point, turn the adjuster CLOCKWISE. This makes the fan more sensitive to RH%, i.e. the fan will come on at a lower RH%.
4. To RAISE the Set-Point, turn the adjuster ANTI-CLOCKWISE. This makes the fan less sensitive to RH%, i.e. the fan will come on at a higher RH%.
5. Replace the Inner Cover and Indoor Grille.
6. Reconnect the mains supply.

C. SERVICING AND MAINTENANCE.

WARNING: THE FAN AND ANCILLARY CONTROL EQUIPMENT MUST BE ISOLATED FROM THE POWER SUPPLY DURING MAINTENANCE.

1. At intervals appropriate to the installation, the fan should be inspected and cleaned to ensure there is no build up of dirt or other deposits.
2. Remove the Indoor Grille (See Section A : 2 for instructions) and wash in warm soapy water.
3. Wipe the shutter blades with a damp cloth until clean.
4. Replace the Grille.

The LoWatt fan has sealed for life bearings, which do not require lubrication.

VENT-AXIA SALES CENTRES

ENGLAND & WALES NATIONAL CALL CENTRE
Newton Road, Crawley
West Sussex
RH10 9JA

Telephone: 01293 530202
Fax: 01293 565169

NORTHERN IRELAND

Telephone: 02890 402220
Fax: 01293 565169

SCOTLAND

Telephone: 0141 429 1166
Fax: 01293 565169

REPUBLIC OF IRELAND
Vent-Axia Ventilation Ltd.
921 Western Road Industrial Estate
Naas Road, Dublin 12.

Telephone: (01) 450 4133
Fax: (01) 450 4570

Did you find these instructions easy to use?

We value your comments, contact us via :

Email: info@vent-axia.com

The Vent-Axia Guarantee

Applicable only to products installed and used in the United Kingdom. For details of the Guarantee outside of the United Kingdom contact your local supplier.

Vent-Axia guarantees this product for five years from the date of purchase against faulty material or workmanship. In the event of any part being found to be defective, the product will be repaired, or at the Company's discretion the product will be replaced without charge, provided that the product:

1). Has been installed and used in accordance with the instruction given with each unit.
2). The electricity supply complies with the rating label.
3). Has not been misused, neglected or damaged.
4). Has not been modified or repaired by any person not authorised to do so by Vent-Axia.

IF CLAIMING UNDER THE TERMS OF THE GUARANTEE

Please return the complete product, carriage paid to your original supplier by post or in person. Please ensure that it is adequately packed and accompanied by a letter clearly marked 'Guarantee Claim' stating the nature of the fault and providing proof of the date and source of purchase.

As part of the policy of continuous product improvement Vent-Axia reserve the right to alter specifications without notice

Vent-Axia®

Head Office: Fleming Way, Crawley, West Sussex RH10 9YX
Tel: 01293 526062 Fax: 01293 551188
Internet site at: www.vent-axia.com

45 90 95 C 1103